VANCOUVER, BC: 877.461.8378 ph. | 604.527.8368 fx.
LOS ANGELES, CA: 909.483.0250 ph. | 909.483.0336 fx.
TULSA, OK: 918.437.8333 ph. | 918.437.8487 fx.
TORONTO, ON 416.550.9280
SEATTLE, WA 425.512.8419
WEBSITE: WWW.QAI.ORG

EVALUATION REPORT

Applicant File Number: W406
Report Number: W406 Edition 6

Applicant: Gerald Van Seters, General Manager
Bethel Windows & Doors
1504 12th Street
Coquitlam, BC
V3K 6X9

Edition 6: January 30, 2017; Application Number W406-6 – Burnaby Office
Issued By: Neil Dumont, Project Manager
Reviewed By: Matt Lansdowne, Director of Engineering
Contents: Pages 1 through 38
Appendices: Pages 39 – 83
Changes: Addition of model codes to 100 and 200/290 Series Vinyl Windows

Edition 6 supersedes and replaces Edition 5. Report reissued as Edition 6

Edition 5: May 4, 2015; Application Number W406 – Coquitlam Office
Issued By: Jason Komorski, Project Manager
Reviewed By: Kevin Saito, Divison Manger
Contents: Pages 1 through 36
Appendices: Pages A1- A42

Edition 4: May 17 2013; Application Number W406 – Coquitlam Office
Issued By: Neil Dumont, Project Manager
Reviewed By: Kevin Saito, Divison Manger
Contents: Pages 1 through 44
Appendices: Pages A1- A47

Edition 3: May 28 2012; Application Number W406 – Coquitlam Office
Issued By: Jason Komorski, Project Manager
Reviewed By: Kevin Saito, Divison Manger
Contents: Pages 1 through 38
Appendices: Pages A1- A36

Edition 2: January 9, 2012; Application Number W406 – Coquitlam Office
Issued By: Jason Komorski, Project Manager
Reviewed By: Kevin Saito, Divison Manger
Contents: Pages 1 through 37
Appendices: Pages A1- A36

ALL REPORTS ARE THE CONFIDENTIAL PROPERTY OF CLIENTS. PUBLICATION OF STATEMENTS, CONCLUSIONS OR EXTRACTS FROM OR REGARDING OUR REPORTS IS NOT PERMITTED WITHOUT OUR WRITTEN APPROVAL. ANY LIABILITY ATTACHED THERETO IS LIMITED TO THE FEE CHARGED. THE RESULTS OF THIS EVALUATION REPORT PERTAIN ONLY TO THE SPECIFIC SAMPLE(S) EVALUATED.

Edition 1: January 4, 2010; Application Number W406 – Port Moody Office
Issued By: Kevin Nam, Project Manager
Reviewed By: Kent Adamson, Divison Manger
Contents: Pages 1 through 23
Figures: Pages 1 - 51

APPLICABLE REQUIREMENTS:

CSA A440.2-09 *"Energy Performance of Windows and other Fenestration Systems".*

SUBJECT:

Fenestration – Vinyl Windows

Manufacturing and Labeling Location(s):	
1)	Bethel Windows & Doors 1504 12th Street Coaldale Alberta Canada T1M M13

ALL REPORTS ARE THE CONFIDENTIAL PROPERTY OF CLIENTS. PUBLICATION OF STATEMENTS, CONCLUSIONS OR EXTRACTS FROM OR REGARDING OUR REPORTS IS NOT PERMITTED WITHOUT OUR WRITTEN APPROVAL. ANY LIABILITY ATTACHED THERETO IS LIMITED TO THE FEE CHARGED. THE RESULTS OF THIS EVALUATION REPORT PERTAIN ONLY TO THE SPECIFIC SAMPLE(S) EVALUATED.

MODELS:

Window Model	Model Code	U-Value (W/m^2*K)	Energy Rating
100 Series Picture Window	100PIC_GO1	1.67	27
	100PIC_GO2	1.71	25
	100PIC_GO3	1.43	32
	100PIC_GO4	1.48	30
	100PIC_GO5	0.98	37
	100PIC_GO6	0.99	36
	100PIC_GO7	0.80	41
	100PIC_GO8	0.83	40
	100PIC_GO9	1.67	23
	100PIC_G10	1.72	21
	100PIC_G11	1.43	28
	100PIC_G12	1.48	26
	100PIC_G13	0.98	34
	100PIC_G14	0.99	33
	100PIC_G15	0.80	38
	100PIC_G16	0.83	37
	100PIC-G17	1.21	33
	100PIC-G17G	1.27	31
	100PIC-G18	1.48	38
	100PIC-G18G	1.55	36
	100PIC-G19	1.18	33
	100PIC-G19G	1.23	31

Window Model	Model Code	U-Value (W/m^2*K)	Energy Rating
100 Series Casement Window	100CAS_GO1	1.66	21
	100CAS_GO2	1.69	19
	100CAS_GO3	1.48	25
	100CAS_GO4	1.52	23
	100CAS_GO5	1.12	29
	100CAS_GO6	1.13	29
	100CAS_GO7	0.99	32
	100CAS_GO8	1.01	31
	100CAS_GO9	1.66	18
	100CAS_G10	1.69	17
	100CAS_G11	1.48	22
	100CAS_G12	1.52	21

ALL REPORTS ARE THE CONFIDENTIAL PROPERTY OF CLIENTS. PUBLICATION OF STATEMENTS, CONCLUSIONS OR EXTRACTS FROM OR REGARDING OUR REPORTS IS NOT PERMITTED WITHOUT OUR WRITTEN APPROVAL. ANY LIABILITY ATTACHED THERETO IS LIMITED TO THE FEE CHARGED. THE RESULTS OF THIS EVALUATION REPORT PERTAIN ONLY TO THE SPECIFIC SAMPLE(S) EVALUATED.

Window Model	Model Code	U-Value (W/m^2*K)	Energy Rating
	100CAS_G13	1.12	27
	100CAS_G14	1.13	26
	100CAS_G15	0.99	30
	100CAS_G16	1.01	29
	100CAS-G17	1.32	25
	100CAS-G17G	1.36	24
	100CAS-G18	1.52	29
	100CAS-G18G	1.56	28
	100CAS-G19	1.30	25
	100CAS-G19G	1.33	24

Window Model	Model Code	U-Value (W/m^2*K)	Energy Rating
100 Series Awning Window	100AWN_GO1	1.66	20
	100AWN_GO2	1.68	19
	100AWN_GO3	1.48	24
	100AWN_GO4	1.50	23
	100AWN_GO5	1.11	29
	100AWN_GO6	1.12	28
	100AWN_GO7	0.98	32
	100AWN_GO8	0.99	31
	100AWN_GO9	1.66	18
	100AWN_G10	1.68	17
	100AWN_G11	1.48	21
	100AWN_G12	1.50	20
	100AWN_G13	1.11	27
	100AWN_G14	1.12	26
	100AWN_G15	0.98	29
	100AWN_G16	0.99	29
	100AWN-G17	1.29	26
	100AWN-G17G	1.31	25
	100AWN-G18	1.47	30
	100AWN-G18G	1.50	29
	100AWN-G19	1.27	25
	100AWN-G19G	1.28	25

ALL REPORTS ARE THE CONFIDENTIAL PROPERTY OF CLIENTS. PUBLICATION OF STATEMENTS, CONCLUSIONS OR EXTRACTS FROM OR REGARDING OUR REPORTS IS NOT PERMITTED WITHOUT OUR WRITTEN APPROVAL. ANY LIABILITY ATTACHED THERETO IS LIMITED TO THE FEE CHARGED. THE RESULTS OF THIS EVALUATION REPORT PERTAIN ONLY TO THE SPECIFIC SAMPLE(S) EVALUATED.

Window Model	Model Code	U-Value (W/m^2*K)	Energy Rating
200/290 Series Picture Window	PIC_GO1	1.51	25
	PIC_GO1_G	1.57	23
	PIC_GO2	1.51	29
	PIC_GO2_G	1.58	26
	PIC_GO3	1.55	24
	PIC_GO3_G	1.61	22
	PIC_GO4	1.55	28
	PIC_GO4_G	1.61	25
	PIC_GO5	1.30	29
	PIC_GO5_G	1.36	27
	PIC_GO6	1.56	35
	PIC GO6_G	1.62	32
	PIC_GO7	1.26	30
	PIC_GO7_G	1.31	28
200/290 Series Single Hung Window	VS_GO1	1.69	19
	VS_GO1_G	1.74	17
	VS_GO2	1.69	22
	VS_GO2_G	1.74	21
	VS_GO3	1.73	19
	VS_GO3_G	1.79	16
	VS_GO4	1.73	22
	VS_GO4_G	1.79	20
	VS_GO5	1.49	24
	VS_GO5_G	1.54	22
	VS_GO6	1.73	28
	VS GO6_G	1.79	26
	VS_GO7	1.47	24
	VS_GO7_G	1.52	22

ALL REPORTS ARE THE CONFIDENTIAL PROPERTY OF CLIENTS. PUBLICATION OF STATEMENTS, CONCLUSIONS OR EXTRACTS FROM OR REGARDING OUR REPORTS IS NOT PERMITTED WITHOUT OUR WRITTEN APPROVAL. ANY LIABILITY ATTACHED THERETO IS LIMITED TO THE FEE CHARGED. THE RESULTS OF THIS EVALUATION REPORT PERTAIN ONLY TO THE SPECIFIC SAMPLE(S) EVALUATED.

Window Model	Model Code	U-Value (W/m^2*K)	Energy Rating
200/290 Series Horizontal Sliding Window	HS_GO1	1.69	19
	HS_GO1_G	1.74	16
	HS_GO2	1.69	22
	HS_GO2_G	1.74	20
	HS_GO3	1.73	18
	HS_GO3_G	1.79	15
	HS_GO4	1.73	21
	HS_GO4_G	1.79	19
	HS_GO5	1.50	23
	HS_GO5_G	1.54	22
	HS_GO6	1.73	28
	HS GO6_G	1.79	26
	HS_GO7	1.48	24
	HS_GO7_G	1.52	22
500 Series Picture Window	500PIC-Cl(3)-Air(12.7-DL)-LoE(3, e=0.035)	1.67	27
	500PIC-Cl(3)-Air(12.7-DL-Grid)-LoE(3, e=0.035)	1.73	24
	500PIC-Cl(3)-Arg(12.7-DL)-LoE(3, e=0.035)	1.45	32
	500PIC-Cl(3)-Arg(12.7-DL-Grid)-LoE(3, e=0.035)	1.51	29
	500PIC-LoE(3,0.035)-Air(12.7-DL)-LoE(3, e=0.147)	1.36	29
	500PIC-LoE(3,0.035)-Air(12.7-DL-Grid)-LoE(3, e=0.147)	1.41	27
	500PIC-LoE(3,0.035)-Arg(12.7-DL)-LoE(3, e=0.147)	1.20	32
	500PIC-LoE(3,0.035)-Arg(12.7-DL-Grid)-LoE(3, e=0.147)	1.26	30
	500PIC-Cl(3)-Air(12.7-DL)-LoE(3, e=0.147)	1.93	30
	500PIC-Cl(3)-Air(12.7-DL-Grid)-LoE(3, e=0.147)	1.98	27
	500PIC-Cl(3)-Arg(12.7-DL)-LoE(3, e=0.147)	1.85	31
	500PIC-Cl(3)-Arg(12.7-DL-Grid)-LoE(3, e=0.147)	1.90	29
500 Series Horizontal Sliding Window	500HS-Cl(3)-Air(12.7-DL)-LoE(3, e=0.035)	1.80	21
	500HS-Cl(3)-Air(12.7-DL-Grid)-LoE(3, e=0.035)	1.85	19
	500HS-Cl(3)-Arg(12.7-DL)-LoE(3, e=0.035)	1.60	26
	500HS-Cl(3)-Arg(12.7-DL-Grid)-LoE(3, e=0.035)	1.65	24
	500HS-LoE(3, 0.035)-Air(12.7-DL)-LoE(3, e=0.147)	1.52	23
	500HS-LoE(3, 0.035)-Air(12.7-DL-Grid)-LoE(3, e=0.147)	1.56	21
	500HS-LoE(3, 0.035)-Arg(12.7-DL)-LoE(3, e=0.147)	1.38	26
	500HS-LoE(3, 0.035)-Arg(12.7-DL-Grid)-LoE(3, e=0.147)	1.42	25
	500HS-Cl(3)-Air(12.7-DL)-LoE(3, e=0.147)	2.06	24
	500HS-Cl(3)-Air(12.7-DL-Grid)-LoE(3, e=0.147)	2.09	22
	500HS-Cl(3)-Arg(12.7-DL)-LoE(3, e=0.147)	1.99	25
	500HS-Cl(3)-Arg(12.7-DL-Grid)-LoE(3, e=0.147)	2.02	23

ALL REPORTS ARE THE CONFIDENTIAL PROPERTY OF CLIENTS. PUBLICATION OF STATEMENTS, CONCLUSIONS OR EXTRACTS FROM OR REGARDING OUR REPORTS IS NOT PERMITTED WITHOUT OUR WRITTEN APPROVAL. ANY LIABILITY ATTACHED THERETO IS LIMITED TO THE FEE CHARGED. THE RESULTS OF THIS EVALUATION REPORT PERTAIN ONLY TO THE SPECIFIC SAMPLE(S) EVALUATED.

Window Model	Model Code	U-Value (W/m^2*K)	Energy Rating
500 Series Single Hung Window	500VS-Cl(3)-Air(12.7-DL)-LoE(3, e=0.035)	1.81	21
	500VS-Cl(3)-Air(12.7-DL-Grid)-LoE(3, e=0.035)	1.86	19
	500VS-Cl(3)-Arg(12.7-DL)-LoE(3, e=0.035)	1.60	25
	500VS-Cl(3)-Arg(12.7-DL-Grid)-LoE(3, e=0.035)	1.66	23
	500VS-LoE(3, 0.035)-Air(12.7-DL)-LoE(3, e=0.147)	1.52	22
	500VS-LoE(3, 0.035)-Air(12.7-DL-Grid)-LoE(3, e=0.147)	1.56	21
	500VS-LoE(3, 0.035)-Arg(12.7-DL)-LoE(3, e=0.147)	1.38	26
	500VS-LoE(3, 0.035)-Arg(12.7-DL-Grid)-LoE(3, e=0.147)	1.42	24
	500VS-Cl(3)-Air(12.7-DL)-LoE(3, e=0.147)	2.05	23
	500VS-Cl(3)-Air(12.7-DL-Grid)-LoE(3, e=0.147)	2.09	21
	500VS-Cl(3)-Arg(12.7-DL)-LoE(3, e=0.147)	1.98	25
	500VS-Cl(3)-Arg(12.7-DL-Grid)-LoE(3, e=0.147)	2.02	23

CONDITIONS OF ACCEPTANCE:

1. The manufacturer must complete a final inspection on 100% of Listed products to show compliance with this evaluation report prior to application of the cQAI mark.

2. Installation instructions are provided with products covered under this evaluation report.

MARKINGS:

Each product is marked with the following content on a permanent label that is readily visible after installation:

- Manufacturer's name, Trademark or other recognized symbol or identification
- QAI File number (W406)
- QAI logo with "c" indicator
- "Evaluation for energy performance in accordance with CSA A440.2"
  "Évalué pour la performance d'énergie en accord à la norme CSA A440.2"

Notes:

1. The energy performance characteristics (U-Value, SHGC, Energy Rating, and Visual Transmission) may be placed on a separate non-permanent label.

2. Window physical performance ratings are not to be included on the same label and are not to be associated with the QAI logo as to imply listing of physical performance ratings.

3. The permanent certification label and optional energy performance characteristics label are purchased from QAI.

ALL REPORTS ARE THE CONFIDENTIAL PROPERTY OF CLIENTS. PUBLICATION OF STATEMENTS, CONCLUSIONS OR EXTRACTS FROM OR REGARDING OUR REPORTS IS NOT PERMITTED WITHOUT OUR WRITTEN APPROVAL. ANY LIABILITY ATTACHED THERETO IS LIMITED TO THE FEE CHARGED. THE RESULTS OF THIS EVALUATION REPORT PERTAIN ONLY TO THE SPECIFIC SAMPLE(S) EVALUATED.

FACTORY TESTS:

Warning

The factory tests specified may present a hazard of injury to personnel and/or property and should only be performed by persons knowledgeable of such hazards and under conditions designed to minimize the possibility of injury.

Incoming Raw Materials
As a minimum, the following quality tests must be performed on incoming raw materials. The manufacturer must document all quality tests:

MATERIAL	TEST	FREQUENCY	SPEC/TOLERANCE
Aluminum Extrusion	1. Verify height and wall thicknesses with a micrometer 2. Visual Inspection	Every Shipment	1. Within agreed upon tolerances. 2. No visual damage.
Glazing Tape and hardware	Visual Inspection	Every Shipment	No visual damage. Verify product matches the description in this report.
Metal Reinforcement	Visual Inspection Verify Material Grade	Every Shipment	Verify material matches the required part number and grade specified in this report.

Final Quality Control Check
A final operational and visual inspection must be conducted on all products. In addition, the following inspection must be documented on 10% of finished product:

TITLE	TEST	PROCEDURE	SPEC/TOLERANCE
Overall Dimensions	Measurement	Measure product length, width and diagonal with tape measure.	Width and length within ±1/16” of customer request. Difference between diagonal measurements ±1/8”
Aesthetic	Visual	Visual Inspection	No damage, scratches, dents, discolorations.
Operability	Operate	Open and close unit	Product must operate smoothly, Sash must seal tightly to main frame. Latches must fully engage keepers.
Correct Labels	Visual Inspection	Visual Inspection	Verify the correct insulating glass unit is installed in the window. Verify the correct temporary label is applied for the specific glazing option.

ALL REPORTS ARE THE CONFIDENTIAL PROPERTY OF CLIENTS. PUBLICATION OF STATEMENTS, CONCLUSIONS OR EXTRACTS FROM OR REGARDING OUR REPORTS IS NOT PERMITTED WITHOUT OUR WRITTEN APPROVAL. ANY LIABILITY ATTACHED THERETO IS LIMITED TO THE FEE CHARGED. THE RESULTS OF THIS EVALUATION REPORT PERTAIN ONLY TO THE SPECIFIC SAMPLE(S) EVALUATED.

DESCRIPTION:

100 Series Picture Window		
Frame:	Description:	A Vinyl extrusion from Veka Canada die # BX-123. Frame dimensions: Width: 2515mm, Height: 1530mm
	Joints:	Corners are mitre cut and thermally welded.
Glazing Method:	Interior Seal: (glazing bead)	Vinyl glazing stops from Veka Canada die # BX-105. A heel bead is applied under the glazing unit and 8” up each jamb.
	Exterior Seal: (dry glazing)	The frame profile includes a flexible vinyl fin-seal that is coextruded. The interior glazing bead provides pressure forcing the glazing unit tight to the frame. See pictures and drawing in appendix A
	Setting Blocks:	Rubberized setting blocks are used at each corner 4” in from each jamb on the sill. They are made by Veka part # BX-6878 and measure 1-1/8”x 1”x 1/8”.
Glazing:	Description:	Two 6mm clear float glass, 24mm overall thickness
Drainage:	Frame:	Two 1/4" drainage holes are drilled through the sill below the sealed unit 3” in from each jamb. The exterior frame has two 1/4"holes through the face of the sill 4” in from the jamb edges. A weephole cover by Accurate Fasteners 91 series in fit into each slot. See pictures in appendix A

ALL REPORTS ARE THE CONFIDENTIAL PROPERTY OF CLIENTS. PUBLICATION OF STATEMENTS, CONCLUSIONS OR EXTRACTS FROM OR REGARDING OUR REPORTS IS NOT PERMITTED WITHOUT OUR WRITTEN APPROVAL. ANY LIABILITY ATTACHED THERETO IS LIMITED TO THE FEE CHARGED. THE RESULTS OF THIS EVALUATION REPORT PERTAIN ONLY TO THE SPECIFIC SAMPLE(S) EVALUATED.

100 Series Casement Window		
Frame:	Description:	Vinyl extrusion from Veka Canada die # BX-131. Frame dimensions: Width: 760mm, Height: 1830mm.
	Joints:	Corners are mitre cut and thermally welded.
Sash:	Description	Vinyl extrusion from Veka Canada die # BX-122. Sash dimensions: Width: 672 mm, Height: 1741 mm.
	Joints:	Corners are mitre cut and thermally welded.
	Reinforcement:	Both stiles have a free floating galvanized steel U-channel reinforcement made by Veka Canada die # BX-6102.
Weather-stripping:	Sash:	One strip of co-extruded flexible PVC fin seal around perimeter of the sash cut and welded at each corner. The weatherstrip is notched out at the snubbers.
	Frame:	Two strips of co-extruded flexible PVC fin-seal around perimeter of the frame cut and welded at each corner.
Glazing Method:	Interior Seal: (glazing bead)	Vinyl glazing stops from Veka Canada die # BX-105. A heel bead is applied under the glazing unit and 8” up each jamb.
	Exterior Seal: (dry glazing)	The frame profile includes a flexible vinyl fin-seal that is coextruded. The interior glazing bead provides pressure forcing the glazing unit tight to the frame. See pictures and drawing in appendix A.
	Setting Blocks:	Rubberized setting blocks are used at each corner 4” in from each jamb on the sill as well as one on the lock side jamb and the head both 2” from that top lock side corner. They are made by Veka part # BX-6878 and measure 1-1/8”x 1”x 1/8”.
Glazing:	Description:	Two 4mm clear float glass, 19mm overall thickness
Drainage:	Sash:	Two 1/4" drainage holes are drilled under the glazing unit 3” in from the jamb. The water exits two 1/4" holes drilled through the exterior face of the bottom rail of the sash 3” in from each jamb. A weephole cover by Accurate Fasteners 91 series is fit into each slot. See pictures in appendix A.
	Frame:	None.
Hardware:	Locks:	One Truth Hardware multi-point lock system. Handle, part # 24.84.32.001/002that is fastened to the frame with two 3/4” screws centered 5” from the outside sill edge. Three tie bar guides used, Truth, part # 45143, centered 6-1/2” and 30” from the bottom inside frame edge, and 5-1/4” from the top inside frame edge. Each tie bar guide is fastened with two 1-1/4” screws. Truth Tie bar, part # 12026.92, 46-1/2” long with three locking points. The distance between the top and middle locking point is 22-1/2” and the distance between the bottom and middle locking point is 21-1/2”.
	Keepers:	Three, Truth Hardware keepers, part # 31218.92. Fastened with two 3/4" screws each aligned with locking points.
	Hinges:	Two, Truth Hardware hinges, part # 14.97.00.006. Sash side: 8” long, fastened with four 5/8” screws. Frame side: 14” long, fastened with four 5/8” screws.
	Snubbers:	Two snubbers, Vantec, part # V-700SNUB-001 Fastened with two 1/2” screws each, on jamb frame 23” from the head and sill.
	Operator:	A rotary operator by Truth Hardware, part # 50.00.32.012 Fastened to sill with six 1” screws. Roto track fastened to sash with five 1/2” screws.
	Riser Block:	A single riser block located 2” in on the lock side of the sill, is fastened with a single 1-1/2” screw. The riser is made by FCI- Molded Products part # 103GB-0750-0000.

ALL REPORTS ARE THE CONFIDENTIAL PROPERTY OF CLIENTS. PUBLICATION OF STATEMENTS, CONCLUSIONS OR EXTRACTS FROM OR REGARDING OUR REPORTS IS NOT PERMITTED WITHOUT OUR WRITTEN APPROVAL. ANY LIABILITY ATTACHED THERETO IS LIMITED TO THE FEE CHARGED. THE RESULTS OF THIS EVALUATION REPORT PERTAIN ONLY TO THE SPECIFIC SAMPLE(S) EVALUATED.

100 Series Awning Window		
Frame:	Description:	Vinyl. Veka, Die # BX-131 Frame dimensions: Width: 1524mm, Height: 914mm
	Joints:	Corners are mitre cut and thermally welded
Sash:	Description:	Vinyl. Veka, Die # BX-122 Sash dimensions: Width: 1476 mm, Height: 870 mm
	Joints:	Corners are mitre cut and thermally welded
	Reinforcement:	The top and bottom rails have a free-floating U-channel of 12-gauge galvanized steel reinforcement. Veka, Profile # BX-6102
Weather-stripping:	Sash:	One strip of co-extruded flexible PVC fin-seal around perimeter of sash, cut and welded at each corner. Fin is cut around snubber locations and also at the bottom corners, see drainage section.
	Frame:	Two strips of co-extruded flexible PVC fin-seal around perimeter of frame, cut and welded at each corner.
Glazing Method:	Interior Seal: (glazing bead)	Vinyl, Veka. Die # BX-105. A heel bead was applied under the entire sealed unit and up either side 6”.
	Exterior Seal: (dry glazing)	Two strips of co-extruded flexible PVC fin-seal around perimeter of sash, cut and welded at each corner.
	Setting Blocks:	Setting blocks are used in two locations under the sealed unit. Veka, Die # BX6878 1/8” x 1” x 1-1/8” black rubber setting block.
Glazing:	Description:	Two 4mm clear float glass, 19mm overall thickness
Drainage:	Sash:	Two 3/16” holes through bottom sash stile, under sealed unit in corner at joint between stiles and rails. Two 3/8” holes in the face of the sash bottom rail, centered 4-1/2” from either outside sash edge. Sash co-extruded weather stripping is cut short by 1” at each bottom corner. The exterior side is fit with a weep hole cover by Accurate Fasteners, 91 Series.
	Frame:	None
Hardware:	Locks:	Two, Truth Hardware Locks, Part # 24.25.32.300 Centered 9-1/2” from the outside sill edge, fastened to frame with two 1/4” screws.
	Keepers:	Two, Truth Hardware keepers, Part # 31376 Fastened with four 1/2” counter sunk screws each, aligned with locking points.
	Hinges:	Two, Truth Hardware hinges, Part # 13.15.00.14 Sash side: 8-1/2” long, fastened with four #8 x 5/8” screws. Frame side: 18” long, fastened with five #8 x 5/8” screws.
	Snubbers:	Two snubbers, Vantec, Part # V-700SNUB-001 Fastened with two #8 x 5/8” screws each, on head of frame centered 19” in from the interior edge of frame jambs on both sides.
	Operator:	Roto operator by Truth Hardware, Part # 51.10.32.011 Fastened to sill with six 1” screws. Roto track fastened to sash with four #8 x 5/8” screws.
	Other:	Sash alignment block centered 2” in from interior edge of jambs on both sides fastened with a single #6 x 5/8” screw.

ALL REPORTS ARE THE CONFIDENTIAL PROPERTY OF CLIENTS. PUBLICATION OF STATEMENTS, CONCLUSIONS OR EXTRACTS FROM OR REGARDING OUR REPORTS IS NOT PERMITTED WITHOUT OUR WRITTEN APPROVAL. ANY LIABILITY ATTACHED THERETO IS LIMITED TO THE FEE CHARGED. THE RESULTS OF THIS EVALUATION REPORT PERTAIN ONLY TO THE SPECIFIC SAMPLE(S) EVALUATED.

290 Series Picture Window		
Frame:	Description:	Vinyl. Veka, Mainframe Die # BX291 Frame filler profiles from Veka: Die # BX-228 used along the jambs and head. Die # BX-256 used along the sill.
	Joints:	Corners are mitre cut and thermally welded
Glazing Method:	Glazing bead (Interior Seal):	Vinyl, Veka, Die # BX-278
	Glazing tape (Interior seal for operable sash, Exterior for fixed):	3/8” x 1/16” glazing tape by 3M, part # 4356 applied to frame in four strips, corners butted together. Corners of glazing tape sealed with Dow Corning Silicone A heel bead was applied under the entire sealed unit and up either side approximately 8”.
	Setting Blocks:	Two setting blocks were used under each sealed unit. 1-1/2” x 3/4" x 1/8” Setting blocks, by Custom Gaskets, part # 83
Glazing:	Description:	See glass options page for approved glazing
Drainage:	Frame:	Two 3/16” holes into the mitre corner at the jamb to sill corner welds. Two 1” x 1/4" slots through the sill from the exterior to under the sill track, centered 4-3/8” from either outside jamb edge. The exterior side is fit with a weep hole cover from Veka, part # 6827 Two 3/16” holes under the sealed unit, centered 2-1/2” from the inside jamb edge.

ALL REPORTS ARE THE CONFIDENTIAL PROPERTY OF CLIENTS. PUBLICATION OF STATEMENTS, CONCLUSIONS OR EXTRACTS FROM OR REGARDING OUR REPORTS IS NOT PERMITTED WITHOUT OUR WRITTEN APPROVAL. ANY LIABILITY ATTACHED THERETO IS LIMITED TO THE FEE CHARGED. THE RESULTS OF THIS EVALUATION REPORT PERTAIN ONLY TO THE SPECIFIC SAMPLE(S) EVALUATED.

290 Series Vertical Slider		
Frame:	Description:	Vinyl. Veka, Mainframe Die # BX291 Frame filler profiles from Veka: Die # BX-245 used along the jambs, BX-228 used along the jambs and head, BX-256 used along the sill.
	Mullion:	Vinyl. Veka, Mullion Die # BX294, reinforced with die # BX-6294 Galvanized Steel Mullion fastened to frame head and sill with two 2-1/2" pan head screws each. Each screw head and the mullion to frame seams are sealed with silicone.
	Joints:	Corners are mitre cut and thermally welded
Sash:	Description:	Vinyl. Veka, Common sash Die # BX207, Interlock Die # BX-209
	Reinforcement:	The interlock stile is reinforced with die # BX-6208 Galvanized steel Each side stile is reinforced with die # BX-6207 Galvanized steel
	Joints:	Corners are mitre cut and thermally welded
Weather-stripping:	Sash:	Amesbury single-fin pile weather-stripping part # 26018745WHG2SB (0.30" wide x 0.19" tall) was used around the sash in multiple locations. Four strips were used on the exterior face of the sash, one per sash profile, oriented perpendicular with the glass. Three strips were used around the sash, one along each side stile and one along the bottom sash rail, oriented parallel to the glass.
	Frame:	Amesbury single-fin pile weather-stripping part # 26018745WHG2SB (0.30" wide x 0.19" tall) was used along the length of the mullion. The same weather-stripping was also used along the interior side of the sill, inserted into die # BX-256.
Glazing Method:	Glazing bead (Exterior seal for operable sash, Interior for fixed):	Vinyl, Veka, Die # BX-278 The bottom glazing bead on the operable unit has a 1/8" x 1/8" notch at each bottom corner to allow for drainage.
	Glazing tape (Interior seal for operable sash, Exterior for fixed):	3/8" x 1/16" glazing tape by 3M, part # 4356 applied to frame and sash in four strips, corners butted together. Corners of glazing tape sealed with Dow Corning Silicone A heel bead was applied to the fixed side, under the entire sealed unit and up either side 3-1/2".
	Setting Blocks:	Two setting blocks were used under each sealed unit. 1-1/2" x 3/4" x 1/8" Setting blocks, by Custom Gaskets, part # 83
Glazing:	Description:	See glass options page for approved glazing
Drainage:	Sash:	See "Interior Seal (glazing bead)" for sash drainage
	Frame:	One 0.20" hole into each jamb, adjacent to the top of the mullion to allow drainage from under the fixed sealed unit. Two 1" x 1/4" slots through the sill from the exterior to under the sill track, centered 4-3/8" from either outside jamb edge. The exterior side is fit with a weep hole cover from Veka, part # 6827
Hardware:	Locks:	Two cam locks, by Truth, part # AW09200599 Fastened to sash with two 3/4" screws each, centered 5-1/4" from the outside sash edge.
	Keeper:	Two Truth keepers, part # 9906. Fastened to mullion with two 3/4" screws each, aligned with locking points.
	Balance system:	Two Spiral ballasts by Caldwell, part # 32HDATW Fastened to frame with one 1" screw through the top of the ballast. Two Tilt Latches by Vanguard, part # 111-1354R / L inserted into notches on either side of the interlock stile. Two pivot shoes by Caldwell, part # 16H70. Paired with Pivot bars from Caldwell, part # 16T120 fastened to sash with three 3/8" screws
	Handle:	Two pull handles by Accurate Fasteners, part # 2632-151-PP-WT-10 Fastened to the sash with two 3/4" screws each, centered 5" from the outside sash edge.

ALL REPORTS ARE THE CONFIDENTIAL PROPERTY OF CLIENTS. PUBLICATION OF STATEMENTS, CONCLUSIONS OR EXTRACTS FROM OR REGARDING OUR REPORTS IS NOT PERMITTED WITHOUT OUR WRITTEN APPROVAL. ANY LIABILITY ATTACHED THERETO IS LIMITED TO THE FEE CHARGED. THE RESULTS OF THIS EVALUATION REPORT PERTAIN ONLY TO THE SPECIFIC SAMPLE(S) EVALUATED.

290 Series Horizontal Sliding Window		
Frame:	Description:	Vinyl frame profiles from Veka Canada. Frame profile, die # BX291 Track profile, die # BX256 was used along the sill, sealed to the recess trim and the most interior face of the frame using Cosmofen. Trim profile, die # BX228 Recess trim profile, die # BX239
	Fixed interlock:	Vinyl fixed interlock profile from Veka Canada, die # BX294, reinforced with galvanized steel profile from Veka Canada, die # BX6294. Fixed interlock was fastened to the head and the sill on the exterior side of the nailing flange, using two #8 x 3” pan head screws per each end connection. Silicone was used under each screw head to seal it to the frame. Fixed interlock to frame seams were also sealed with silicone.
	Joints:	Corners are mitre cut and thermally welded. See description above for fixed interlock to frame joint details.
Sash:	Description:	Vinyl sash profiles from Veka Canada. Common sash profile, die # BX207. Sash interlock profile, die # BX209. Interlock stile was reinforced with galvanized steel profile from Veka Canada, die # BX6208. Top rail was reinforced with galvanized steel profile from Veka Canada, die # BX6207.
	Joints:	Corners are mitre cut and thermally welded.
Weather-stripping:	Sash:	Single-fin pile weather-stripping from Amesbury, part # 26018745WHG2SB (0.30” wide x 0.19” tall) was pre-inserted in the T-slot around the sash in multiple locations before thermal welding. Four strips were used on the exterior face of the sash, oriented perpendicular to the glass plane, corners were butted together and sealed with silicone. Three strips were used around outer face the sash, one along each top and bottom rail and one along the sash stile closest to the operable side jamb, oriented parallel to the glass plane.
	Frame:	Single-fin pile weather-stripping from Amesbury, part # 26018745WHG2SB (0.30” wide x 0.19” tall) was used along the entire length of the fixed interlock, sill track and recess trim. Weather-stripping was inserted into the T-slot of fixed interlock profile, track profile and recess trim profile, corners butted together.
Glazing Method:	Glazing bead (Exterior seal for operable sash, interior for fixed):	Vinyl glazing bead profile from Veka Canada, die # BX278, corners butted together. The bottom glazing bead of the sash has a 1/8” x 1/8” notch at each bottom corner to allow for drainage.
	Glazing tape (Interior seal for operable sash, exterior for fixed):	Black foam 3/8” x 1/16” glazing tape from 3M, part # 4356 applied to each the frame and the sash in four strips, corners butted together. Corners of glazing tape were sealed with silicone.
	Heel bead:	A heel bead was applied to the fixed side, under the entire sealed unit and up either side 3”.
	Setting Blocks:	Black rubber setting blocks from Custom Gaskets, part # 83, dimensions of 1-1/2” x 3/4" x 1/8”. Two setting blocks were used under each sealed unit, centered 1-1/2” to 2-3/4” from the inside edge at the fixed lite, and centered 1-7/8” from inside edge at the sash. Silicone was used as adhesive under sash setting blocks.

ALL REPORTS ARE THE CONFIDENTIAL PROPERTY OF CLIENTS. PUBLICATION OF STATEMENTS, CONCLUSIONS OR EXTRACTS FROM OR REGARDING OUR REPORTS IS NOT PERMITTED WITHOUT OUR WRITTEN APPROVAL. ANY LIABILITY ATTACHED THERETO IS LIMITED TO THE FEE CHARGED. THE RESULTS OF THIS EVALUATION REPORT PERTAIN ONLY TO THE SPECIFIC SAMPLE(S) EVALUATED.

290 Series Horizontal Sliding Window (continued)		
Glazing:	Description:	See glass options page for approved glazing
Drainage:	Sash:	See “glazing bead” for sash drainage description.
	Frame:	Two 3/16” holes were drilled into the sill directly under the fixed side sealed unit, centered 2-1/16” from the jamb inside edge and 2-3/4” from the inside edge of the fixed interlock. Track profile had two 3/16” holes drilled into the corner of sill track and the sill, one directly next to the fixed side jamb and one centered 1” from the inside edge of the fixed interlock, on the left side of the fixed interlock, when looking from interior. Sill track drain at the operable side jamb was provided by the gap created by the sill track and recess trim joint. Two 1” x 1/4" slots were punched through the sill from the exterior to under the sill track, through three layers of vinyl, into the cavity directly under the sill track, centered 4-5/16” from either outside jamb edge. The exterior of the slots were fit with a weep hole cover from Veka Canada, part # 6827.
Hardware:	Locks:	One cam lock from Truth Hardware, part # AW09200599. Fastened to the sash using two #7 x 5/8” countersink screws, centered 21” from the bottom sash edge.
	Keepers:	One keeper from Truth Hardware, part # 9906. Installed into the fixed interlock keeper pocket, fastened with two #8 x 3/4" countersink screws, aligned with locking point of the cam lock.
	Rollers:	Two sets of double brass rollers from Veka Canada, part # 6811. Snapped into the 1-3/8” x 7/16” slot punched into the bottom rail of the sash, centered 3-3/16” from the outer sash edge at the interlocking stile and 3-11/16” from the outer sash edge at the jamb side sash stile.
	Handles:	One pull handle from Accurate Fasteners, part # 2632-151-PP-WT-10. Fastened to the sash using two #8 x 3/4” countersink screws, centered 20-3/4” from the bottom sash edge.
	Tilt latch:	Concealed plastic tilt latch from Vanguard, part # 111-1354R/L WH, snapped into cut-out at the top of each sash stile.
Sealant	Description:	Silicone sealant from Dow Corning.

500 Series Picture Window		
Frame:	Description:	Vinyl, from Veka, Die # BX501
	Joints:	Corners are mitre cut and thermally welded
Glazing Method:	Interior Seal (glazing tape):	Century Vallen glazing tape, 1/16” x 3/8” model # 3MT 4536 applied to sash in four strips, corners butted together. Silicone is used at each corner.
	Exterior Seal (glazing bead):	Vinyl, from Veka, Die # BX278 Glazing bead end joints are sealed with Ferco PVC Adhesive, part # D-ST1985-135-7
	Setting Blocks:	Custom Gaskets, part # 88049 Black rubber, 1-1/2” x 3/4” x 1/8" Under the sealed unit in two places.
Glazing:	Description	3mm clear float glass, 3/4" overall thickness
Drainage:	Sash:	1/8” x 1/8” slots cut into the bottom strip of glazing bead at each bottom corner.
	Frame:	Two 10mm x 9mm slots into the sill adjacent to either jamb. 1" x 1/4” slots on exterior most wall of sill, centered 4” from outside edge of jambs, fit with weep hole cover from Vanguard, part # 110-0303.

ALL REPORTS ARE THE CONFIDENTIAL PROPERTY OF CLIENTS. PUBLICATION OF STATEMENTS, CONCLUSIONS OR EXTRACTS FROM OR REGARDING OUR REPORTS IS NOT PERMITTED WITHOUT OUR WRITTEN APPROVAL. ANY LIABILITY ATTACHED THERETO IS LIMITED TO THE FEE CHARGED. THE RESULTS OF THIS EVALUATION REPORT PERTAIN ONLY TO THE SPECIFIC SAMPLE(S) EVALUATED.

500 Series Horizontal Sliding Window		
Frame:	Description:	Vinyl, from Veka, Die # BX501 Track, Die # BX227
	Mullion:	Vinyl, from Veka, Die # BX505 Mullion fastened to frame with two #8 x 2-1/2” screws through the frame profile at the head and sill. Screw heads sealed with silicone. Reinforced with galvanized steel from Veka, Die # BX6505
	Joints:	Corners are mitre cut and thermally welded
Sash:	Description	Vinyl, from Veka, Common sash Die # BX503, Interlock Die # BX504 Reinforced with galvanized steel from Veka, Die # 6504 Sash dimensions: Width: 873 mm, Height: 1359 mm
	Joints:	Corners are mitre cut and thermally welded
Weather-stripping:	Sash:	4 strips of single-fin pile weather-stripping, part # 187 x .26 by Amesbury around the perimeter of sash, oriented perpendicular to the glass. Weather-stripping is inserted before welding.
	Frame:	1 strip of single-fin pile weather-stripping, part # 187 x .26 by Amesbury along the length of the mullion, oriented perpendicular to the glass.
Glazing Method:	Interior Seal (glazing tape):	Century Vallen glazing tape, 1/16” x 3/8” model # 3MT 4536 applied to sash in four strips, corners butted together. Silicone is used at each corner.
	Exterior Seal (glazing bead):	Vinyl, from Veka, Die # BX278
	Setting Blocks:	Custom Gaskets, part # 88049 Black rubber, 1-1/2” x 3/4” x 1/8" Under each sealed unit in two places.
Glazing:	Description	3mm clear float glass, 3/4" overall thickness
Drainage:	Sash:	1/8” x 1/8” slots cut into the bottom strip of glazing bead at each bottom corner for the fixed and operable sash.
	Frame:	Two 10mm x 9mm slots into the sill adjacent to either jamb. 1" x 1/4” slots on exterior most wall of sill, centered 4-1/2” from outside edge of jambs fit with weep hole cover from Vanguard, part # 110-0303.
Hardware:	Locks:	One Truth lock, part # AO 9200599 WC Fastened to sash with two 3/4” countersunk screws. Centered on the interlock stile of the sash.
	Keepers:	One, Truth keeper, part # C09906 WC Fastened with two 3/4" countersunk screws.
	Rollers:	Two rollers from Veka, part # BX 6827 Fastened with two 1/2” screws per roller Centered 3-1/2” from the outside edge of the sash stile.

ALL REPORTS ARE THE CONFIDENTIAL PROPERTY OF CLIENTS. PUBLICATION OF STATEMENTS, CONCLUSIONS OR EXTRACTS FROM OR REGARDING OUR REPORTS IS NOT PERMITTED WITHOUT OUR WRITTEN APPROVAL. ANY LIABILITY ATTACHED THERETO IS LIMITED TO THE FEE CHARGED. THE RESULTS OF THIS EVALUATION REPORT PERTAIN ONLY TO THE SPECIFIC SAMPLE(S) EVALUATED.

500 Series Vertical Sliding Window		
Frame:	Description:	Vinyl, from Veka, Die # BX501
	Mullion:	Vinyl, from Veka, Die # BX505 Mullion fastened to frame with two #8 x 2-1/2" screws through the frame profile at the head and sill. Screw heads sealed with silicone. Reinforced with galvanized steel from Veka, Die # BX6505
	Joints:	Corners are mitre cut and thermally welded
Sash:	Description	Vinyl, from Veka, Common sash Die # BX503, Interlock Die # BX504 No reinforcement used Sash dimensions: Width: 923 mm, Height: 1050 mm
	Joints:	Corners are mitre cut and thermally welded
Weather-stripping:	Sash:	4 strips of single-fin pile weather-stripping, part # 187 x .26 by Amesbury around the perimeter of sash, oriented perpendicular to the glass. Weather-stripping is inserted before welding.
	Frame:	1 strip of tri-fin pile weather-stripping, part # 27018745GYG2T by WD Solar along the length of the mullion, oriented perpendicular to the glass.
Glazing Method:	Interior Seal (glazing tape):	Century Vallen glazing tape, 1/16" x 3/8" model # 3MT 4536 applied to sash in four strips, corners butted together. Silicone is used at each corner.
	Exterior Seal (glazing bead):	Vinyl, from Veka, Die # BX278
	Setting Blocks:	Custom Gaskets, part # 88049 Black rubber, 1-1/2" x 3/4" x 1/8" Under each sealed unit in two places.
Glazing:	Description	3mm clear float glass, 19mm overall thickness
Drainage:	Sash:	1/8" x 1/8" slots cut into the bottom strip of glazing bead at each bottom corner for the fixed and operable sash.
	Frame:	Two 10mm x 9mm slots into the sill adjacent to either jamb. 1" x 1/4" slots on exterior most wall of sill, centered 4-1/2" from outside edge of jambs fit with weep hole cover from Vanguard, part # 110-0303 .
Hardware:	Locks:	One Truth lock, part # AO 9200599 WC Fastened to sash with two 3/4" countersunk screws. Centered on the interlock stile of the sash.
	Keepers:	One, Truth keeper, part # C09906 WC Fastened with two 3/4" countersunk screws.
	Spring loaded balance:	Two balances from Amesbury, part # 3440, 36" long Balance clip fastened to sash with two 3/8" screws per side.

ALL REPORTS ARE THE CONFIDENTIAL PROPERTY OF CLIENTS. PUBLICATION OF STATEMENTS, CONCLUSIONS OR EXTRACTS FROM OR REGARDING OUR REPORTS IS NOT PERMITTED WITHOUT OUR WRITTEN APPROVAL. ANY LIABILITY ATTACHED THERETO IS LIMITED TO THE FEE CHARGED. THE RESULTS OF THIS EVALUATION REPORT PERTAIN ONLY TO THE SPECIFIC SAMPLE(S) EVALUATED.

TESTS:

Sampling:

Each subject window was submitted by Bethel Windows to QAI as a typical production sample then tested to the requirements of AAMA/WDMA/CSA 101/I.S.2 A440 as being representative of the models covered in this report. The products were examined against the submitted documentation supplied by Bethel Windows.

Thermal simulations of each subject window were performed by QAI Laboratories Ltd. in accordance with CSA A440.2 “Fenestration Energy Performance”.

Results:

Tests are carried out on a specimen of specific dimensions. Product performance may be affected by variations in the windows dimensions, assembly details and installation method. The reader is advised to ensure product conformity with all details of this evaluation report.

Test procedures are designed to test the performance of the test specimen only and are not used to test the performance of the installation, particularly the perimeter sealant joint and the anchoring of the assembly. Products shall be installed in accordance with the manufacturer’s recommended instructions.

The following table summarizes the test report numbers and size of test specimens used for thermal simulation to CSA A440.2.

Window Series	QAI AAMA/WDMA/ CSA101/I.S.2/A440 Physical Test Report	QAI AAMA/WDMA/ CSA101/I.S.2/A440.2 Simulation Report	Thermal Simulation Size (Width x Height)
100 Series Picture Window	T668-53 October 20, 2015	T668-70a R1 December 13, 2016	1200 x 1500 mm
100 Casement Window	T668-54 October 20, 2015	T668-70a R1 December 13, 2016	600 x 1200 mm
100 Series Awning Window	T668-60 October 19, 2016	T668-70a R1 December 13, 2016	1200 x 600 mm
290 Series Picture Window	T668-62 August 3, 2016	T668-70b R1 January 16, 2017	1200 x 1500 mm
290 Series Single Hung Window	T668-63 August 3, 2016	T668-70b R1 January 16, 2017	1200 x 1500 mm
290 Series Horizontal Sliding Window	T668-63 August 3, 2016	T668-70b R1 January 16, 2017	1500 x 1200 mm
500 Series Picture Window	T668-9 March 10, 2011	T668-27 April 30, 2013	1200 x 1500 mm
500 Series Single Hung Window	T668-9 March 10, 2011	T668-27 April 30, 2013	1200 x 1500 mm
500 Series Horizontal Sliding Window	T668-9 March 10, 2011	T668-27 April 30, 2013	1500 x 1200 mm

.

ALL REPORTS ARE THE CONFIDENTIAL PROPERTY OF CLIENTS. PUBLICATION OF STATEMENTS, CONCLUSIONS OR EXTRACTS FROM OR REGARDING OUR REPORTS IS NOT PERMITTED WITHOUT OUR WRITTEN APPROVAL. ANY LIABILITY ATTACHED THERETO IS LIMITED TO THE FEE CHARGED. THE RESULTS OF THIS EVALUATION REPORT PERTAIN ONLY TO THE SPECIFIC SAMPLE(S) EVALUATED.

VANCOUVER, BC: 877.461.8378 ph. | 604.527.8368 fx.
LOS ANGELES, CA: 909.483.0250 ph. | 909.483.0336 fx.
TULSA, OK: 918.437.8333 ph. | 918.437.8487 fx.
TORONTO, ON 416.550.9280
SEATTLE, WA 425.512.8419
WEBSITE: WWW.QAI.ORG

Testing was conducted in accordance with CSA A440.2-09 with the results shown below.

Note: For combination windows, each individual window style must be evaluated by QAI for the entire product to be labeled. Tempered glass may be used instead of clear float glass without an effect on the energy performance of the product. Clear obscure glass may be used instead of clear float glass without an effect on the energy performance of the product. Products listed in the tables below with a total glass thickness of +-2mm of the rated product and glazing cavity widths of +-20% of the rated product may also be labeled with the same energy performance ratings.

Note: The client manufactures their own glazing units under IGMAC Listing number 010814G 028822G

100 Series Picture Window
Size: 1200 mm x 1500 mm

Model Code	Number of Layers	Exterior Layer (mm)	Middle Layer (mm)	Interior Layer (mm)	Emissivity Surface 2	Emissivity Surface 3	Emissivity Surface 4	Emissivity Surface 5	Cavity 1 (mm)	Cavity 2 (mm)	Spacer Bar Type	Grille Bar	Visual Transmittance Total Window	Window U-Value (W/m2K)	Window SHGC	Energy Rating (ER)
100PI C-G01	2	3 Clear	-	3 Solarban 60	-	0.035	-	-	12.2 Air	-	DL	None	0.63	1.67	0.40	27
100PI C-G02	2	3 Clear	-	3 Solarban 60	-	0.035	-	-	12.2 Air	-	DL	5/16”	0.60	1.71	0.38	25
100PI C-G03	2	3 Clear	-	3 Solarban 60	-	0.035	-	-	12.2 Argon	-	DL	None	0.63	1.43	0.40	32
100PI C-G04	2	3 Clear	-	3 Solarban 60	-	0.035	-	-	12.2 Argon	-	DL	5/16”	0.60	1.48	0.38	30
100PI C-G05	3	3 Clear	3 Solarban 60	3 Solarban 60	-	0.035	-	0.035	12.2 Air	12.2 Air	DL	None	0.51	0.98	0.33	37
100PI C-G06	3	3 Clear	3 Solarban 60	3 Solarban 60	-	0.035	-	0.035	12.2 Air	12.2 Air	DL	5/16”	0.48	0.99	0.31	36
100PI C-G07	3	3 Clear	3 Solarban 60	3 Solarban 60	-	0.035	-	0.035	12.2 Argon	12.2 Argon	DL	None	0.51	0.80	0.33	41
100PI C-G08	3	3 Clear	3 Solarban 60	3 Solarban 60	-	0.035	-	0.035	12.2 Argon	12.2 Argon	DL	5/16”	0.48	0.83	0.31	40

ALL REPORTS ARE THE CONFIDENTIAL PROPERTY OF CLIENTS. PUBLICATION OF STATEMENTS, CONCLUSIONS OR EXTRACTS FROM OR REGARDING OUR REPORTS IS NOT PERMITTED WITHOUT OUR WRITTEN APPROVAL. ANY LIABILITY ATTACHED THERETO IS LIMITED TO THE FEE CHARGED. THE RESULTS OF THIS EVALUATION REPORT PERTAIN ONLY TO THE SPECIFIC SAMPLE(S) EVALUATED.

100 Series Picture Window Continued
Size: 1200 mm x 1500 mm

Model Code	Number of Layers	Exterior Layer (mm)	Middle Layer (mm)	Interior Layer (mm)	Emissivity Surface 2	Emissivity Surface 3	Emissivity Surface 4	Emissivity Surface 5	Cavity 1 (mm)	Cavity 2 (mm)	Spacer Bar Type	Grille Bar	Visual Transmittance Total Window	Window U-Value (W/m2K)	Window SHGC	Energy Rating (ER)
100PI C-G09	2	3 Solarban 60	-	3 Clear	0.035	-	-	-	12.2 Air	-	DL	None	0.63	1.67	0.34	23
100PI C-G10	2	3 Solarban 60	-	3 Clear	0.035	-	-	-	12.2 Air	-	DL	5/16”	0.60	1.72	0.32	21

ALL REPORTS ARE THE CONFIDENTIAL PROPERTY OF CLIENTS. PUBLICATION OF STATEMENTS, CONCLUSIONS OR EXTRACTS FROM OR REGARDING OUR REPORTS IS NOT PERMITTED WITHOUT OUR WRITTEN APPROVAL. ANY LIABILITY ATTACHED THERETO IS LIMITED TO THE FEE CHARGED. THE RESULTS OF THIS EVALUATION REPORT PERTAIN ONLY TO THE SPECIFIC SAMPLE(S) EVALUATED.

100 Series Picture Window Continued
Size: 1200 mm x 1500 mm

Model Code	Number Of Layers	Exterior Layer (mm)	Middle Layer (mm)	Interior Layer (mm)	Emissivity Surface 2	Emissivity Surface 3	Emissivity Surface 4	Emissivity Surface 5	Cavity 1 (mm)	Cavity 2 (mm)	Spacer Bar Type	Grille Bar	Visual Transmittance Total Window	Window U-Value (W/m2K)	Window SHGC	Energy Rating (ER)
100PIC-G11	2	3 Solarban 60	-	3 Clear	0.035	-	-	-	12.2 Argon	-	DL	None	0.63	1.43	0.34	28
100PIC-G12	2	3 Solarban 60	-	3 Clear	0.035	-	-	-	12.2 Argon	-	DL	5/16”	0.60	1.48	0.32	26
100PIC-G13	3	3 Solarban 60	3 Solarban 60	3 Clear	0.035	-	0.035	-	12.2 Air	12.2 Air	DL	None	0.51	0.98	0.27	34
100PIC-G14	3	3 Solarban 60	3 Solarban 60	3 Clear	0.035	-	0.035	-	12.2 Air	12.2 Air	DL	5/16”	0.48	0.99	0.26	33
100PIC-G15	3	3 Solarban 60	3 Solarban 60	3 Clear	0.035	-	0.035	-	12.2 Argon	12.2 Argon	DL	None	0.51	0.80	0.27	38
100PIC-G16	3	3 Solarban 60	3 Solarban 60	3 Clear	0.035	-	0.035	-	12.2 Argon	12.2 Argon	DL	5/16”	0.48	0.83	0.26	37
100PIC-G17	2	3 Solarban 60	-	3 SunGuard IS20	0.035	-	0.198	-	12.2 Argon	-	DL	None	0.61	1.21	0.33	33
100PIC-G17G	2	3 Solarban 60	-	3 SunGuard IS20	0.035	-	0.198	-	12.2 Argon	-	DL	5/16”	0.59	1.27	0.32	31
100PIC-G18	2	3 Sungate 400	-	3 Sungate 400	0.115	0.115	-	-	12.2 Argon	-	DL	None	0.66	1.48	0.53	38
100PIC-G18G	2	3 Sungate 400	-	3 Sungate 400	0.115	0.115	-	-	12.2 Argon	-	DL	5/16”	0.63	1.55	0.51	36
100PIC-G19	2	3 Solarban 60	-	3 AGC CS73	0.035	-	0.148	-	12.2 Argon	-	DL	None	0.57	1.18	0.32	33
100PIC-G19G	2	3 Solarban 60	-	3 AGC CS73	0.035	-	0.148	-	12.2 Argon	-	DL	5/16”	0.55	1.23	0.31	31

ALL REPORTS ARE THE CONFIDENTIAL PROPERTY OF CLIENTS. PUBLICATION OF STATEMENTS, CONCLUSIONS OR EXTRACTS FROM OR REGARDING OUR REPORTS IS NOT PERMITTED WITHOUT OUR WRITTEN APPROVAL. ANY LIABILITY ATTACHED THERETO IS LIMITED TO THE FEE CHARGED. THE RESULTS OF THIS EVALUATION REPORT PERTAIN ONLY TO THE SPECIFIC SAMPLE(S) EVALUATED.

100 Series Casement Window
Size: 600 mm x 1500 mm

Model Code	Number Of Layers	Exterior Layer (mm)	Middle Layer (mm)	Interior Layer (mm)	Emissivity Surface 2	Emissivity Surface 3	Emissivity Surface 4	Emissivity Surface 5	Cavity 1 (mm)	Cavity 2 (mm)	Spacer Bar Type	Grille Bar	Visual Transmittance Total Window	Window U-Value (W/m2K)	Window SHGC	Energy Rating (ER)
100CAS -G01	2	3 Clear	-	3 Solarban 60	-	0.035	-	-	12.2 Air	-	DL	None	0.46	1.66	0.30	21
100CAS -G02	2	3 Clear	-	3 Solarban 60	-	0.035	-	-	12.2 Air	-	DL	5/16”	0.44	1.69	0.28	19
100CAS -G03	2	3 Clear	-	3 Solarban 60	-	0.035	-	-	12.2 Argon	-	DL	None	0.46	1.48	0.30	25
100CAS -G04	2	3 Clear	-	3 Solarban 60	-	0.035	-	-	12.2 Argon	-	DL	5/16”	0.44	1.52	0.29	23
100CAS -G05	3	3 Clear	3 Solarban 60	3 Solarban 60	-	0.035	-	0.035	12.2 Air	12.2 Air	DL	None	0.37	1.12	0.24	29
100CAS -G06	3	3 Clear	3 Solarban 60	3 Solarban 60	-	0.035	-	0.035	12.2 Air	12.2 Air	DL	5/16”	0.36	1.13	0.23	29
100CAS -G07	3	3 Clear	3 Solarban 60	3 Solarban 60	-	0.035	-	0.035	12.2 Argon	12.2 Argon	DL	None	0.37	0.99	0.24	32
100CAS -G08	3	3 Clear	3 Solarban 60	3 Solarban 60	-	0.035	-	0.035	12.2 Argon	12.2 Argon	DL	5/16”	0.36	1.01	0.23	31
100CAS -G09	2	3 Solarban 60	-	3 Clear	0.035	-	-	-	12.2 Air	-	DL	None	0.46	1.66	0.25	18
100CAS -G10	2	3 Solarban 60	-	3 Clear	0.035	-	-	-	12.2 Air	-	DL	5/16”	0.44	1.69	0.24	17

ALL REPORTS ARE THE CONFIDENTIAL PROPERTY OF CLIENTS. PUBLICATION OF STATEMENTS, CONCLUSIONS OR EXTRACTS FROM OR REGARDING OUR REPORTS IS NOT PERMITTED WITHOUT OUR WRITTEN APPROVAL. ANY LIABILITY ATTACHED THERETO IS LIMITED TO THE FEE CHARGED. THE RESULTS OF THIS EVALUATION REPORT PERTAIN ONLY TO THE SPECIFIC SAMPLE(S) EVALUATED.

100 Series Casement Window Continued
Size: 600 mm x 1500 mm

Model Code	Number Of Layers	Exterior Layer (mm)	Middle Layer (mm)	Interior Layer (mm)	Emissivity Surface 2	Emissivity Surface 3	Emissivity Surface 4	Emissivity Surface 5	Cavity 1 (mm)	Cavity 2 (mm)	Spacer Bar Type	Grille Bar	Total Visual Transmittance	Window U-Value (W/m2K)	Window SHGC	Energy Rating (ER)
100CAS-G11	2	3 Solarban 60	-	3 Clear	0.035	-	-	-	12.2 Argon	-	DL	None	0.46	1.48	0.25	22
100CAS-G12	2	3 Solarban 60	-	3 Clear	0.035	-	-	-	12.2 Argon	-	DL	5/16”	0.44	1.52	0.24	21
100CAS-G13	3	3 Solarban 60	3 Solarban 60	3 Clear	0.035	-	0.035	-	12.2 Air	12.2 Air	DL	None	0.37	1.12	0.20	27
100CAS-G14	3	3 Solarban 60	3 Solarban 60	3 Clear	0.035	-	0.035	-	12.2 Air	12.2 Air	DL	5/16”	0.36	1.13	0.19	26
100CAS-G15	3	3 Solarban 60	3 Solarban 60	3 Clear	0.035	-	0.035	-	12.2 Argon	12.2 Argon	DL	None	0.37	0.99	0.20	30
100CAS-G16	3	3 Solarban 60	3 Solarban 60	3 Clear	0.035	-	0.035	-	12.2 Argon	12.2 Argon	DL	5/16”	0.36	1.01	0.19	29
100CAS-G17	2	3 Solarban 60	-	3 SunGuard IS20	0.035	-	0.198	-	12.2 Argon	-	DL	None	0.45	1.32	0.25	25
100CAS-G17G	2	3 Solarban 60	-	3 SunGuard IS20	0.035	-	0.198	-	12.2 Argon	-	DL	5/16”	0.43	1.36	0.24	24
100CAS-G18	2	3 Sungate 400	-	3 Sungate 400	0.115	0.115	-	-	12.2 Argon	-	DL	None	0.48	1.52	0.39	29
100CAS-G18G	2	3 Sungate 400	-	3 Sungate 400	0.115	0.115	-	-	12.2 Argon	-	DL	5/16”	0.44	1.56	0.38	28
100CAS-G19	2	3 Solarban 60	-	3 AGC CS73	0.035	-	0.148	-	12.2 Argon	-	DL	None	0.42	1.30	0.24	25
100CAS-G19G	2	3 Solarban 60	-	3 AGC CS73	0.035	-	0.148	-	12.2 Argon	-	DL	5/16”	0.40	1.33	0.23	24

ALL REPORTS ARE THE CONFIDENTIAL PROPERTY OF CLIENTS. PUBLICATION OF STATEMENTS, CONCLUSIONS OR EXTRACTS FROM OR REGARDING OUR REPORTS IS NOT PERMITTED WITHOUT OUR WRITTEN APPROVAL. ANY LIABILITY ATTACHED THERETO IS LIMITED TO THE FEE CHARGED. THE RESULTS OF THIS EVALUATION REPORT PERTAIN ONLY TO THE SPECIFIC SAMPLE(S) EVALUATED.

100 Series Awning Window
Size: 600 mm x 1500 mm

Model Code	Number of Layers	Exterior Layer (mm)	Middle Layer (mm)	Interior Layer (mm)	Emissivity Surface 2	Emissivity Surface 3	Emissivity Surface 4	Emissivity Surface 5	Cavity 1 (mm)	Cavity 2 (mm)	Spacer Bar Type	Grille Bar	Visual Transmittance Total Window	Window U-Value (W/m2K)	Window SHGC	Energy Rating (ER)
100AWN-G01	2	3 Clear	-	3 Solarban 60	-	0.035	-	-	12.2 Air	-	DL	None	0.46	1.66	0.30	20
100AWN-G02	2	3 Clear	-	3 Solarban 60	-	0.035	-	-	12.2 Air	-	DL	5/16” Grid	0.44	1.68	0.29	19
100AWN-G03	2	3 Clear	-	3 Solarban 60	-	0.035	-	-	12.2 Argon	-	DL	None	0.46	1.48	0.30	24
100AWN-G04	2	3 Clear	-	3 Solarban 60	-	0.035	-	-	12.2 Argon	-	DL	5/16” Grid	0.44	1.50	0.29	23
100AWN-G05	3	3 Clear	3 Solarban 60	3 Solarban 60	-	0.035	-	0.035	12.2 Air	12.2 Air	DL	None	0.37	1.11	0.24	29
100AWN-G06	3	3 Clear	3 Solarban 60	3 Solarban 60	-	0.035	-	0.035	12.2 Air	12.2 Air	DL	5/16” Grid	0.36	1.12	0.23	28
100AWN-G07	3	3 Clear	3 Solarban 60	3 Solarban 60	-	0.035	-	0.035	12.2 Argon	12.2 Argon	DL	None	0.37	0.98	0.24	32
100AWN-G08	3	3 Clear	3 Solarban 60	3 Solarban 60	-	0.035	-	0.035	12.2 Argon	12.2 Argon	DL	5/16” Grid	0.36	0.99	0.23	31
100CAS-G09	2	3 Solarban 60	-	3 Clear	0.035	-	-	-	12.2 Air	-	DL	None	0.46	1.66	0.25	18
100CAS-G10	2	3 Solarban 60	-	3 Clear	0.035	-	-	-	12.2 Air	-	DL	5/16”	0.44	1.69	0.24	17

ALL REPORTS ARE THE CONFIDENTIAL PROPERTY OF CLIENTS. PUBLICATION OF STATEMENTS, CONCLUSIONS OR EXTRACTS FROM OR REGARDING OUR REPORTS IS NOT PERMITTED WITHOUT OUR WRITTEN APPROVAL. ANY LIABILITY ATTACHED THERETO IS LIMITED TO THE FEE CHARGED. THE RESULTS OF THIS EVALUATION REPORT PERTAIN ONLY TO THE SPECIFIC SAMPLE(S) EVALUATED.

100 Series Awning Window Continued
Size: 600 mm x 1500 mm

Model Code	Number Of Layers	Exterior Layer (mm)	Middle Layer (mm)	Interior Layer (mm)	Emissivity Surface 2	Emissivity Surface 3	Emissivity Surface 4	Emissivity Surface 5	Cavity 1 (mm)	Cavity 2 (mm)	Spacer Bar Type	Grille Bar	Total Visual Transmittance	Window U-Value (W/m2K)	Window SHGC	Energy Rating (ER)
100AWN-G11	2	3 Solarban 60	-	3 Clear	0.035	-	-	-	12.2 Argon	-	DL	None	0.46	1.48	0.25	21
100AWN-G12	2	3 Solarban 60	-	3 Clear	0.035	-	-	-	12.2 Argon	-	DL	5/16”	0.44	1.50	0.24	20
100AWN-G13	3	3 Solarban 60	3 Solarban 60	3 Clear	0.035	-	0.035	-	12.2 Air	12.2 Air	DL	None	0.37	1.11	0.20	27
100AWN-G14	3	3 Solarban 60	3 Solarban 60	3 Clear	0.035	-	0.035	-	12.2 Air	12.2 Air	DL	5/16”	0.36	1.12	0.19	26
100AWN-G15	3	3 Solarban 60	3 Solarban 60	3 Clear	0.035	-	0.035	-	12.2 Argon	12.2 Argon	DL	None	0.37	0.98	0.20	29
100AWN-G16	3	3 Solarban 60	3 Solarban 60	3 Clear	0.035	-	0.035	-	12.2 Argon	12.2 Argon	DL	5/16”	0.36	0.99	0.19	29
100AWN-G17	2	3 Solarban 60	-	3 SunGuard IS20	0.035	-	0.198	-	12.2 Argon	-	DL	None	0.45	1.29	0.25	26
100AWN-G17G	2	3 Solarban 60	-	3 SunGuard IS20	0.035	-	0.198	-	12.2 Argon	-	DL	5/16”	0.43	1.31	0.24	25
100AWN-G18	2	3 Sungate 400	-	3 Sungate 400	0.115	0.115	-	-	12.2 Argon	-	DL	None	0.48	1.47	0.39	30
100AWN-G18G	2	3 Sungate 400	-	3 Sungate 400	0.115	0.115	-	-	12.2 Argon	-	DL	5/16”	0.46	1.50	0.38	29
100AWN-G19	2	3 Solarban 60	-	3 AGC CS73	0.035	-	0.148	-	12.2 Argon	-	DL	None	0.42	1.27	0.24	25
100AWN-G19G	2	3 Solarban 60	-	3 AGC CS73	0.035	-	0.148	-	12.2 Argon	-	DL	5/16”	0.40	1.28	0.23	25

ALL REPORTS ARE THE CONFIDENTIAL PROPERTY OF CLIENTS. PUBLICATION OF STATEMENTS, CONCLUSIONS OR EXTRACTS FROM OR REGARDING OUR REPORTS IS NOT PERMITTED WITHOUT OUR WRITTEN APPROVAL. ANY LIABILITY ATTACHED THERETO IS LIMITED TO THE FEE CHARGED. THE RESULTS OF THIS EVALUATION REPORT PERTAIN ONLY TO THE SPECIFIC SAMPLE(S) EVALUATED.

290 Series Picture Window
Size: 1200 mm x 1500 mm

Model Code	Number of Layers	Exterior Layer (mm)	Middle Layer (mm)	Interior Layer (mm)	Emissivity Surface 2	Emissivity Surface 3	Emissivity Surface 4	Cavity 1 (mm)	Spacer Bar Type	Grille Bar	Visual Transmittance Total Window	Window U-Value (W/m2K)	Window SHGC	Energy Rating (ER)
290PIC_GO1	2	3 Clear	3 Solarban 60	3 Clear	0.035	-	-	12.7 Argon	Truseal Duralite 48H	None	0.59	1.51	0.32	25
290PIC_GO1_G	2	3 Clear	3 Solarban 60	3 Clear	0.035	-	-	12.7 Argon	Truseal Duralite 48H	5/16”	0.56	1.57	0.30	23
290PIC_GO2	2	3 Clear	3 Clear	3 Solarban 60	-	0.035	-	12.7 Argon	Truseal Duralite 48H	None	0.59	1.51	0.38	29
290PIC_GO2_G	2	3 Clear	3 Clear	3 Solarban 60	-	0.035	-	12.7 Argon	Truseal Duralite 48H	5/16”	0.56	1.58	0.36	26
290PIC_GO3	2	3 Clear	3 Solarban 60	3 Clear	0.035	-	-	12.7 Argon	Intercept Ultra	None	0.59	1.55	0.32	24
290PIC_GO3_G	2	3 Clear	3 Solarban 60	3 Clear	0.035	-	-	12.7 Argon	Intercept Ultra	5/16”	0.56	1.61	0.30	22
290PIC_GO4	2	3 Clear	3 Clear	3 Solarban 60	-	0.035	-	12.7 Argon	Intercept Ultra	None	0.59	1.55	0.38	28
290PIC_GO4_G	2	3 Clear	3 Clear	3 Solarban 60	-	0.035	-	12.7 Argon	Intercept Ultra	5/16”	0.56	1.61	0.36	25

ALL REPORTS ARE THE CONFIDENTIAL PROPERTY OF CLIENTS. PUBLICATION OF STATEMENTS, CONCLUSIONS OR EXTRACTS FROM OR REGARDING OUR REPORTS IS NOT PERMITTED WITHOUT OUR WRITTEN APPROVAL. ANY LIABILITY ATTACHED THERETO IS LIMITED TO THE FEE CHARGED. THE RESULTS OF THIS EVALUATION REPORT PERTAIN ONLY TO THE SPECIFIC SAMPLE(S) EVALUATED.

290 Series Picture Window Continued
Size: 1200 mm x 1500 mm

Model Code	Number of Layers	Exterior Layer (mm)	Middle Layer (mm)	Interior Layer (mm)	Emissivity Surface 2	Emissivity Surface 3	Emissivity Surface 4	Cavity 1 (mm)	Spacer Bar Type	Grille Bar	Visual Transmittance Total Window	Window U-Value (W/m2K)	Window SHGC	Energy Rating (ER)
290PIC_GO5	2	3 Clear	3 Solarban 60	3 SunGuard IS 20	0.035	-	0.198	12.7 Argon	Truseal Duralite 48H	None	0.58	1.30	0.31	29
290PIC_GO5_G	2	3 Clear	3 Solarban 60	3 SunGuard IS 20	0.035	-	-	12.7 Argon	Truseal Duralite 48H	5/16”	0.55	1.36	0.30	27
290PIC_GO6	2	3 Clear	3 Sungate 400	3 Sungate 400	0.155	0.155	-	12.7 Argon	Truseal Duralite 48H	None	0.62	1.56	0.50	35
290PIC_GO6_G	2	3 Clear	3 Sungate 400	3 Sungate 400	0.155	0.155	-	12.7 Argon	Truseal Duralite 48H	5/16”	0.59	1.62	0.48	32
290PIC_GO7	2	3 Clear	3 Solarban 60	3 Comfort Select 73	0.035	0.148	-	12.7 Argon	Truseal Duralite 48H	None	0.53	1.26	0.30	30
290PIC_GO7_G	2	3 Clear	3 Solarban 60	3 Comfort Select 73	0.035	0.148	-	12.7 Argon	Truseal Duralite 48H	5/16”	0.51	1.31	0.29	28

ALL REPORTS ARE THE CONFIDENTIAL PROPERTY OF CLIENTS. PUBLICATION OF STATEMENTS, CONCLUSIONS OR EXTRACTS FROM OR REGARDING OUR REPORTS IS NOT PERMITTED WITHOUT OUR WRITTEN APPROVAL. ANY LIABILITY ATTACHED THERETO IS LIMITED TO THE FEE CHARGED. THE RESULTS OF THIS EVALUATION REPORT PERTAIN ONLY TO THE SPECIFIC SAMPLE(S) EVALUATED.

290 Series Horizontal Sliding Window
Size: 1500 mm x 1200 mm

Model Code	Number of Layers	Exterior Layer (mm)	Middle Layer (mm)	Interior Layer (mm)	Emissivity Surface 2	Emissivity Surface 3	Emissivity Surface 4	Cavity 1 (mm)	Spacer Bar Type	Grille Bar	Visual Transmittance Total Window	Window U-Value (W/m2K)	Window SHGC	Energy Rating (ER)
290HS_GO1	2	3 Clear	3 Solarban 60	3 Clear	0.035	-	-	12.7 Argon	Truseal Duralite 48H	None	0.55	1.69	0.30	19
290HS_GO1_G	2	3 Clear	3 Solarban 60	3 Clear	0.035	-	-	12.7 Argon	Truseal Duralite 48H	5/16”	0.52	1.74	0.28	16
290HS_GO2	2	3 Clear	3 Clear	3 Solarban 60	-	0.035	-	12.7 Argon	Truseal Duralite 48H	None	0.55	1.69	0.36	22
290HS_GO2_G	2	3 Clear	3 Clear	3 Solarban 60	-	0.035	-	12.7 Argon	Truseal Duralite 48H	5/16”	0.52	1.74	0.34	20
290HS_GO3	2	3 Clear	3 Solarban 60	3 Clear	0.035	-	-	12.7 Argon	Intercept Ultra	None	0.55	1.73	0.30	18
290HS_GO3_G	2	3 Clear	3 Solarban 60	3 Clear	0.035	-	-	12.7 Argon	Intercept Ultra	5/16”	0.52	1.79	0.28	15
290HS_GO4	2	3 Clear	3 Clear	3 Solarban 60	-	0.035	-	12.7 Argon	Intercept Ultra	None	0.55	1.73	0.36	21
290HS_GO4_G	2	3 Clear	3 Clear	3 Solarban 60	-	0.035	-	12.7 Argon	Intercept Ultra	5/16”	0.52	1.79	0.34	19

ALL REPORTS ARE THE CONFIDENTIAL PROPERTY OF CLIENTS. PUBLICATION OF STATEMENTS, CONCLUSIONS OR EXTRACTS FROM OR REGARDING OUR REPORTS IS NOT PERMITTED WITHOUT OUR WRITTEN APPROVAL. ANY LIABILITY ATTACHED THERETO IS LIMITED TO THE FEE CHARGED. THE RESULTS OF THIS EVALUATION REPORT PERTAIN ONLY TO THE SPECIFIC SAMPLE(S) EVALUATED.

290 Series Horizontal Sliding Window Continued
Size: 1500 mm x 1200 mm

Model Code	Number of Layers	Exterior Layer (mm)	Middle Layer (mm)	Interior Layer (mm)	Emissivity Surface 2	Emissivity Surface 3	Emissivity Surface 4	Cavity 1 (mm)	Spacer Bar Type	Grille Bar	Visual Transmittance Total Window	Window U-Value (W/m2K)	Window SHGC	Energy Rating (ER)
290HS_GO5	2	3 Clear	3 Solarban 60	3 SunGuard IS 20	0.035	-	0.198	12.7 Argon	Truseal Duralite 48H	None	0.53	1.50	0.29	23
290HS_GO5_G	2	3 Clear	3 Solarban 60	3 SunGuard IS 20	0.035	-	-	12.7 Argon	Truseal Duralite 48H	5/16”	0.51	1.54	0.28	22
290HS_GO6	2	3 Clear	3 Sungate 400	3 Sungate 400	0.155	0.155	-	12.7 Argon	Truseal Duralite 48H	None	0.57	1.73	0.46	28
290HS_GO6_G	2	3 Clear	3 Sungate 400	3 Sungate 400	0.155	0.155	-	12.7 Argon	Truseal Duralite 48H	5/16”	0.55	1.79	0.44	26
290HS_GO7	2	3 Clear	3 Solarban 60	3 Comfort Select 73	0.035	0.148	-	12.7 Argon	Truseal Duralite 48H	None	0.50	1.48	0.28	24
290HS_GO7_G	2	3 Clear	3 Solarban 60	3 Comfort Select 73	0.035	0.148	-	12.7 Argon	Truseal Duralite 48H	5/16”	0.47	1.52	0.27	22

ALL REPORTS ARE THE CONFIDENTIAL PROPERTY OF CLIENTS. PUBLICATION OF STATEMENTS, CONCLUSIONS OR EXTRACTS FROM OR REGARDING OUR REPORTS IS NOT PERMITTED WITHOUT OUR WRITTEN APPROVAL. ANY LIABILITY ATTACHED THERETO IS LIMITED TO THE FEE CHARGED. THE RESULTS OF THIS EVALUATION REPORT PERTAIN ONLY TO THE SPECIFIC SAMPLE(S) EVALUATED.

290 Series Vertical Sliding Window
Size: 1200 mm x 1500 mm

Model Code	Number of Layers	Exterior Layer (mm)	Middle Layer (mm)	Interior Layer (mm)	Emissivity Surface 2	Emissivity Surface 3	Emissivity Surface 4	Cavity 1 (mm)	Spacer Bar Type	Grille Bar	Visual Transmittance Total Window	Window U-Value (W/m2K)	Window SHGC	Energy Rating (ER)
290VS_GO1	2	3 Clear	3 Solarban 60	3 Clear	0.035	-	-	12.7 Argon	Truseal Duralite 48H	None	0.55	1.69	0.29	19
290VS_GO1_G	2	3 Clear	3 Solarban 60	3 Clear	0.035	-	-	12.7 Argon	Truseal Duralite 48H	5/16”	0.52	1.74	0.28	17
290VS_GO2	2	3 Clear	3 Clear	3 Solarban 60	-	0.035	-	12.7 Argon	Truseal Duralite 48H	None	0.55	1.69	0.35	22
290VS_GO2_G	2	3 Clear	3 Clear	3 Solarban 60	-	0.035	-	12.7 Argon	Truseal Duralite 48H	5/16”	0.52	1.74	0.34	21
290VS_GO3	2	3 Clear	3 Solarban 60	3 Clear	0.035	-	-	12.7 Argon	Intercept Ultra	None	0.55	1.73	0.30	19
290VS_GO3_G	2	3 Clear	3 Solarban 60	3 Clear	0.035	-	-	12.7 Argon	Intercept Ultra	5/16”	0.52	1.79	0.28	16
290VS_GO4	2	3 Clear	3 Clear	3 Solarban 60	-	0.035	-	12.7 Argon	Intercept Ultra	None	0.55	1.73	0.36	22
290VS_GO4_G	2	3 Clear	3 Clear	3 Solarban 60	-	0.035	-	12.7 Argon	Intercept Ultra	5/16”	0.52	1.79	0.34	20

ALL REPORTS ARE THE CONFIDENTIAL PROPERTY OF CLIENTS. PUBLICATION OF STATEMENTS, CONCLUSIONS OR EXTRACTS FROM OR REGARDING OUR REPORTS IS NOT PERMITTED WITHOUT OUR WRITTEN APPROVAL. ANY LIABILITY ATTACHED THERETO IS LIMITED TO THE FEE CHARGED. THE RESULTS OF THIS EVALUATION REPORT PERTAIN ONLY TO THE SPECIFIC SAMPLE(S) EVALUATED.

290 Series Vertical Sliding Window Continued
Size: 1200 mm x 1500 mm

Model Code	Number of Layers	Exterior Layer (mm)	Middle Layer (mm)	Interior Layer (mm)	Emissivity Surface 2	Emissivity Surface 3	Emissivity Surface 4	Cavity 1 (mm)	Spacer Bar Type	Grille Bar	Visual Transmittance Total Window	Window U-Value (W/m2K)	Window SHGC	Energy Rating (ER)
290VS_GO5	2	3 Clear	3 Solarban 60	3 SunGuard IS 20	0.035	-	0.198	12.7 Argon	Truseal Duralite 48H	None	0.53	1.49	0.29	24
290VS_GO5_G	2	3 Clear	3 Solarban 60	3 SunGuard IS 20	0.035	-	-	12.7 Argon	Truseal Duralite 48H	5/16”	0.51	1.54	0.28	22
290VS_GO6	2	3 Clear	3 Sungate 400	3 Sungate 400	0.155	0.155	-	12.7 Argon	Truseal Duralite 48H	None	0.57	1.73	0.46	28
290VS_GO6_G	2	3 Clear	3 Sungate 400	3 Sungate 400	0.155	0.155	-	12.7 Argon	Truseal Duralite 48H	5/16”	0.55	1.79	0.44	26
290VS_GO7	2	3 Clear	3 Solarban 60	3 Comfort Select 73	0.035	0.148	-	12.7 Argon	Truseal Duralite 48H	None	0.50	1.47	0.28	24
290VS_GO7_G	2	3 Clear	3 Solarban 60	3 Comfort Select 73	0.035	0.148	-	12.7 Argon	Truseal Duralite 48H	5/16”	0.47	1.52	0.27	22

ALL REPORTS ARE THE CONFIDENTIAL PROPERTY OF CLIENTS. PUBLICATION OF STATEMENTS, CONCLUSIONS OR EXTRACTS FROM OR REGARDING OUR REPORTS IS NOT PERMITTED WITHOUT OUR WRITTEN APPROVAL. ANY LIABILITY ATTACHED THERETO IS LIMITED TO THE FEE CHARGED. THE RESULTS OF THIS EVALUATION REPORT PERTAIN ONLY TO THE SPECIFIC SAMPLE(S) EVALUATED.

500 Series Picture Window
Size: 1500 mm x 1200 mm

Model Code	Number Of Layers	Exterior Layer (mm)	Interior Layer (mm)	Emissivity Surface 2	Emissivity Surface 3	Emissivity Surface 4	Cavity (mm)	Spacer Bar Type	Grille Bar	Visual Transmittance Total Window	Window U-Value (W/m2K)	Window SHGC	Energy Rating (ER)
500PIC-Cl(3)-Air(12.7-DL)-LoE(3, e=0.035)	2	3 Clear	3 Solarban 60	-	0.035	-	12.7 Air	Duralite	None	0.63	1.67	0.40	27
500PIC-Cl(3)-Air(12.7-DL-Grid)-LoE(3, e=0.035)	2	3 Clear	3 Solarban 60	-	0.035	-	12.7 Air	Duralite	5/16	0.60	1.73	0.38	24
500PIC-Cl(3)-Arg(12.7-DL)-LoE(3, e=0.035)	2	3 Clear	3 Solarban 60	-	0.035	-	12.7 Argon	Duralite	None	0.63	1.45	0.40	32
500PIC-Cl(3)-Arg(12.7-DL-Grid)-LoE(3, e=0.035)	2	3 Clear	3 Solarban 60	-	0.035	-	12.7 Argon	Duralite	5/16	0.60	1.51	0.39	29
500PIC-LoE(3, 0.035)-Air(12.7-DL)-LoE(3, e=0.147)	2	3 Solarban60	3 Sungate 600	0.035		0.147	12.7 Air	Duralite	None	0.56	1.36	0.32	29
500PIC-LoE(3, 0.035)-Air(12.7-DL-Grid)-LoE(3, e=0.147)	2	3 Solarban60	3 Sungate 600	0.035	-	0.147	12.7 Air	Duralite	5/16	0.53	1.41	0.30	27
500PIC-LoE(3, 0.035)-Arg(12.7-DL)-LoE(3, e=0.147)	2	3 Solarban60	3 Sungate 600	0.035	-	0.147	12.7 Argon	Duralite	None	0.56	1.20	0.32	32
500PIC-LoE(3, 0.035)-Arg(12.7-DL-Grid)-LoE(3, e=0.147)	2	3 Solarban60	3 Sungate 600	0.035	-	0.147	12.7 Argon	Duralite	5/16	0.53	1.26	0.30	30
500PIC-Cl(3)-Air(12.7-DL)-LoE(3, e=0.147)	2	3 Clear	3 Solarban 60	-	-	0.147	12.7 Air	Duralite	None	0.63	1.93	0.55	30
500PIC-Cl(3)-Air(12.7-DL-Grid)-LoE(3, e=0.147)	2	3 Clear	3 Solarban 60	-	-	0.147	12.7 Air	Duralite	5/16	0.60	1.98	0.53	27
500PIC-Cl(3)-Arg(12.7-DL)-LoE(3, e=0.147)	2	3 Clear	3 Solarban 60	-	-	0.147	12.7 Argon	Duralite	None	0.63	1.85	0.55	31
500PIC-Cl(3)-Arg(12.7-DL-Grid)-LoE(3, e=0.147)	2	3 Clear	3 Solarban 60	-	-	0.147	12.7 Argon	Duralite	5/16	0.60	1.90	0.53	29

ALL REPORTS ARE THE CONFIDENTIAL PROPERTY OF CLIENTS. PUBLICATION OF STATEMENTS, CONCLUSIONS OR EXTRACTS FROM OR REGARDING OUR REPORTS IS NOT PERMITTED WITHOUT OUR WRITTEN APPROVAL. ANY LIABILITY ATTACHED THERETO IS LIMITED TO THE FEE CHARGED. THE RESULTS OF THIS EVALUATION REPORT PERTAIN ONLY TO THE SPECIFIC SAMPLE(S) EVALUATED.

500 Series Horizontal Sliding Window
Size: 1500 mm x 1200 mm

Model Code	Number Of Layers	Exterior Layer	Interior Layer	Emissivity Surface 2	Emissivity Surface 3	Emissivity Surface 4	Cavity	Spacer Bar Type	Grille Bar	Total Visual Transmittance	Window U-Value (W/m2K)	Window SHGC	Energy Rating (ER)
500HS-Cl(3)-Air(12.7-DL)-LoE(3, e=0.035)	2	3 Clear	3 Solarban 60	-	0.035	-	12.7 Air	Duralite	None	0.57	1.80	0.36	21
500HS-Cl(3)-Air(12.7-DL-Grid)-LoE(3, e=0.035)	2	3 Clear	3 Solarban 60	-	0.035	-	12.7 Air	Duralite	5/16	0.54	1.85	0.35	19
500HS-Cl(3)-Arg(12.7-DL)-LoE(3, e=0.035)	2	3 Clear	3 Solarban 60	-	0.035	-	12.7 Argon	Duralite	None	0.57	1.60	0.37	26
500HS-Cl(3)-Arg(12.7-DL-Grid)-LoE(3, e=0.035)	2	3 Clear	3 Solarban 60	-	0.035	-	12.7 Argon	Duralite	5/16	0.54	1.65	0.35	24
500HS-LoE(3, 0.035)-Air(12.7-DL)-LoE(3, e=0.147)	2	3 Solarban60	3 Sungate 600	0.035		0.147	12.7 Air	Duralite	None	0.50	1.52	0.29	23
500HS-LoE(3, 0.035)-Air(12.7-DL-Grid)-LoE(3, e=0.147)	2	3 Solarban60	3 Sungate 600	0.035	-	0.147	12.7 Air	Duralite	5/16	0.48	1.56	0.27	21
500HS-LoE(3, 0.035)-Arg(12.7-DL)-LoE(3, e=0.147)	2	3 Solarban60	3 Sungate 600	0.035	-	0.147	12.7 Argon	Duralite	None	0.50	1.38	0.29	26
500HS-LoE(3, 0.035)-Arg(12.7-DL-Grid)-LoE(3, e=0.147)	2	3 Solarban60	3 Sungate 600	0.035	-	0.147	12.7 Argon	Duralite	5/16	0.48	1.42	0.27	25
500HS-Cl(3)-Air(12.7-DL)-LoE(3, e=0.147)	2	3 Clear	3 Solarban 60	-	-	0.147	12.7 Air	Duralite	None	0.57	2.06	0.50	24
500HS-Cl(3)-Air(12.7-DL-Grid)-LoE(3, e=0.147)	2	3 Clear	3 Solarban 60	-	-	0.147	12.7 Air	Duralite	5/16	0.54	2.09	0.48	22
500HS-Cl(3)-Arg(12.7-DL)-LoE(3, e=0.147)	2	3 Clear	3 Solarban 60	-	-	0.147	12.7 Argon	Duralite	None	0.57	1.99	0.50	25
500HS-Cl(3)-Arg(12.7-DL-Grid)-LoE(3, e=0.147)	2	3 Clear	3 Solarban 60	-	-	0.147	12.7 Argon	Duralite	5/16	0.54	2.02	0.48	23

ALL REPORTS ARE THE CONFIDENTIAL PROPERTY OF CLIENTS. PUBLICATION OF STATEMENTS, CONCLUSIONS OR EXTRACTS FROM OR REGARDING OUR REPORTS IS NOT PERMITTED WITHOUT OUR WRITTEN APPROVAL. ANY LIABILITY ATTACHED THERETO IS LIMITED TO THE FEE CHARGED. THE RESULTS OF THIS EVALUATION REPORT PERTAIN ONLY TO THE SPECIFIC SAMPLE(S) EVALUATED.

500 Series Single Hung Window
Size: 1200 mm x 1500 mm

Model Code	Number Of Layers	Exterior Layer	Interior Layer	Emissivity Surface 2	Emissivity Surface 3	Emissivity Surface 4	Cavity	Spacer Bar Type	Grille Bar	Total Visual Transmittance	Window U-Value (W/m2K)	Window SHGC	Energy Rating (ER)
500VS-Cl(3)-Air(12.7-DL)-LoE(3, e=0.035)	2	3 Clear	3 Solarban 60	-	0.035	-	12.7 Air	Duralite	None	0.57	1.81	0.36	21
500VS-Cl(3)-Air(12.7-DL-Grid)-LoE(3, e=0.035)	2	3 Clear	3 Solarban 60	-	0.035	-	12.7 Air	Duralite	5/16	0.54	1.86	0.35	19
500VS-Cl(3)-Arg(12.7-DL)-LoE(3, e=0.035)	2	3 Clear	3 Solarban 60	-	0.035	-	12.7 Argon	Duralite	None	0.57	1.60	0.37	25
500VS-Cl(3)-Arg(12.7-DL-Grid)-LoE(3, e=0.035)	2	3 Clear	3 Solarban 60	-	0.035	-	12.7 Argon	Duralite	5/16	0.54	1.66	0.35	23
500VS-LoE(3, 0.035)-Air(12.7-DL)-LoE(3, e=0.147)	2	3 Solarban60	3 Sungate 600	0.035		0.147	12.7 Air	Duralite	None	0.50	1.52	0.29	22
500VS-LoE(3, 0.035)-Air(12.7-DL-Grid)-LoE(3, e=0.147)	2	3 Solarban60	3 Sungate 600	0.035	-	0.147	12.7 Air	Duralite	5/16	0.48	1.56	0.27	21
500VS-LoE(3, 0.035)-Arg(12.7-DL)-LoE(3, e=0.147)	2	3 Solarban60	3 Sungate 600	0.035	-	0.147	12.7 Argon	Duralite	None	0.50	1.38	0.29	26
500VS-LoE(3, 0.035)-Arg(12.7-DL-Grid)-LoE(3, e=0.147)	2	3 Solarban60	3 Sungate 600	0.035	-	0.147	12.7 Argon	Duralite	5/16	0.48	1.42	0.27	24
500VS-Cl(3)-Air(12.7-DL)-LoE(3, e=0.147)	2	3 Clear	3 Solarban 60	-	-	0.147	12.7 Air	Duralite	None	0.57	2.05	0.50	23
500VS-Cl(3)-Air(12.7-DL-Grid)-LoE(3, e=0.147)		3 Clear	3 Solarban 60	-	-	0.147	12.7 Air	Duralite	None	0.54	2.09	0.48	21
500VS-Cl(3)-Arg(12.7-DL)-LoE(3, e=0.147)		3 Clear	3 Solarban 60	-	-	0.147	12.7 Air	Duralite	5/16	0.57	1.98	0.50	25
500VS-Cl(3)-Arg(12.7-DL-Grid)-LoE(3, e=0.147)		3 Clear	3 Solarban 60	-	-	0.147	12.7 Argon	Duralite	None	0.54	2.02	0.48	23

ALL REPORTS ARE THE CONFIDENTIAL PROPERTY OF CLIENTS. PUBLICATION OF STATEMENTS, CONCLUSIONS OR EXTRACTS FROM OR REGARDING OUR REPORTS IS NOT PERMITTED WITHOUT OUR WRITTEN APPROVAL. ANY LIABILITY ATTACHED THERETO IS LIMITED TO THE FEE CHARGED. THE RESULTS OF THIS EVALUATION REPORT PERTAIN ONLY TO THE SPECIFIC SAMPLE(S) EVALUATED.

Notes: Surfaces are numbered from exterior (1) to Interior.
ER = 57.76(SHGCw) – 21.90(Uw) – 1.97(L75) + 40
All glazing surface emissivities are assumed to be 0.84 unless otherwise stated.
Grid bar drawing located in Appendix A
The gas fill method is single probe with 90% argon fill.

ALL REPORTS ARE THE CONFIDENTIAL PROPERTY OF CLIENTS. PUBLICATION OF STATEMENTS, CONCLUSIONS OR EXTRACTS FROM OR REGARDING OUR REPORTS IS NOT PERMITTED WITHOUT OUR WRITTEN APPROVAL. ANY LIABILITY ATTACHED THERETO IS LIMITED TO THE FEE CHARGED. THE RESULTS OF THIS EVALUATION REPORT PERTAIN ONLY TO THE SPECIFIC SAMPLE(S) EVALUATED.

VANCOUVER, BC: 877.461.8378 ph. | 604.527.8368 fx.
LOS ANGELES, CA: 909.483.0250 ph. | 909.483.0336 fx.
TULSA, OK: 918.437.8333 ph. | 918.437.8487 fx.
TORONTO, ON 416.550.9280
SEATTLE, WA 425.512.8419
WEBSITE: WWW.QAI.ORG

CONCLUSION:

Products were found to comply with applicable requirements and are acceptable for listing.

Issued By :

Neil Dumont
Project Manager

Reviewed By :

Matt Lansdowne
Director of Engineering

ALL REPORTS ARE THE CONFIDENTIAL PROPERTY OF CLIENTS. PUBLICATION OF STATEMENTS, CONCLUSIONS OR EXTRACTS FROM OR REGARDING OUR REPORTS IS NOT PERMITTED WITHOUT OUR WRITTEN APPROVAL. ANY LIABILITY ATTACHED THERETO IS LIMITED TO THE FEE CHARGED. THE RESULTS OF THIS EVALUATION REPORT PERTAIN ONLY TO THE SPECIFIC SAMPLE(S) EVALUATED.

APPENDIX A

Page:	Description:
39-43	100 Series Assembly Drawings
44-49	100 Series Profile Drawings
50-52	290 Series Assembly Drawings
53-65	290 Series Profile Drawings
67-68	500 Series Assembly Drawings
69-76	500 Series Profile Drawings
77-79	Spacer Bar
80	Grid Bar

APPENDIX B

Page:	Description:
81	Incoming Materials Checklist
82	Inspection Checklist
83	Manufacturing Records Sample List

ALL REPORTS ARE THE CONFIDENTIAL PROPERTY OF CLIENTS. PUBLICATION OF STATEMENTS, CONCLUSIONS OR EXTRACTS FROM OR REGARDING OUR REPORTS IS NOT PERMITTED WITHOUT OUR WRITTEN APPROVAL. ANY LIABILITY ATTACHED THERETO IS LIMITED TO THE FEE CHARGED. THE RESULTS OF THIS EVALUATION REPORT PERTAIN ONLY TO THE SPECIFIC SAMPLE(S) EVALUATED.

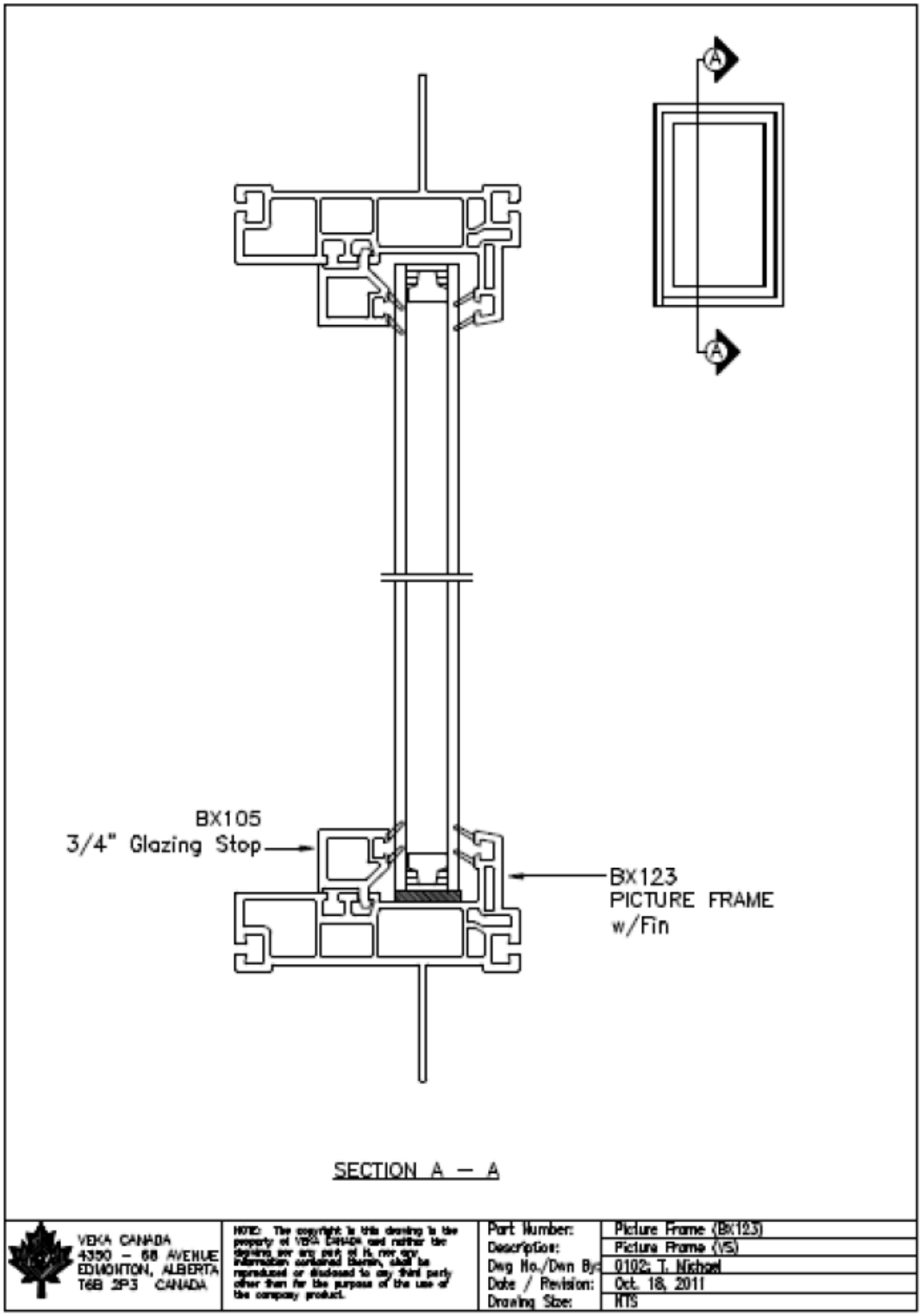

ALL REPORTS ARE THE CONFIDENTIAL PROPERTY OF CLIENTS. PUBLICATION OF STATEMENTS, CONCLUSIONS OR EXTRACTS FROM OR REGARDING OUR REPORTS IS NOT PERMITTED WITHOUT OUR WRITTEN APPROVAL. ANY LIABILITY ATTACHED THERETO IS LIMITED TO THE FEE CHARGED. THE RESULTS OF THIS EVALUATION REPORT PERTAIN ONLY TO THE SPECIFIC SAMPLE(S) EVALUATED.

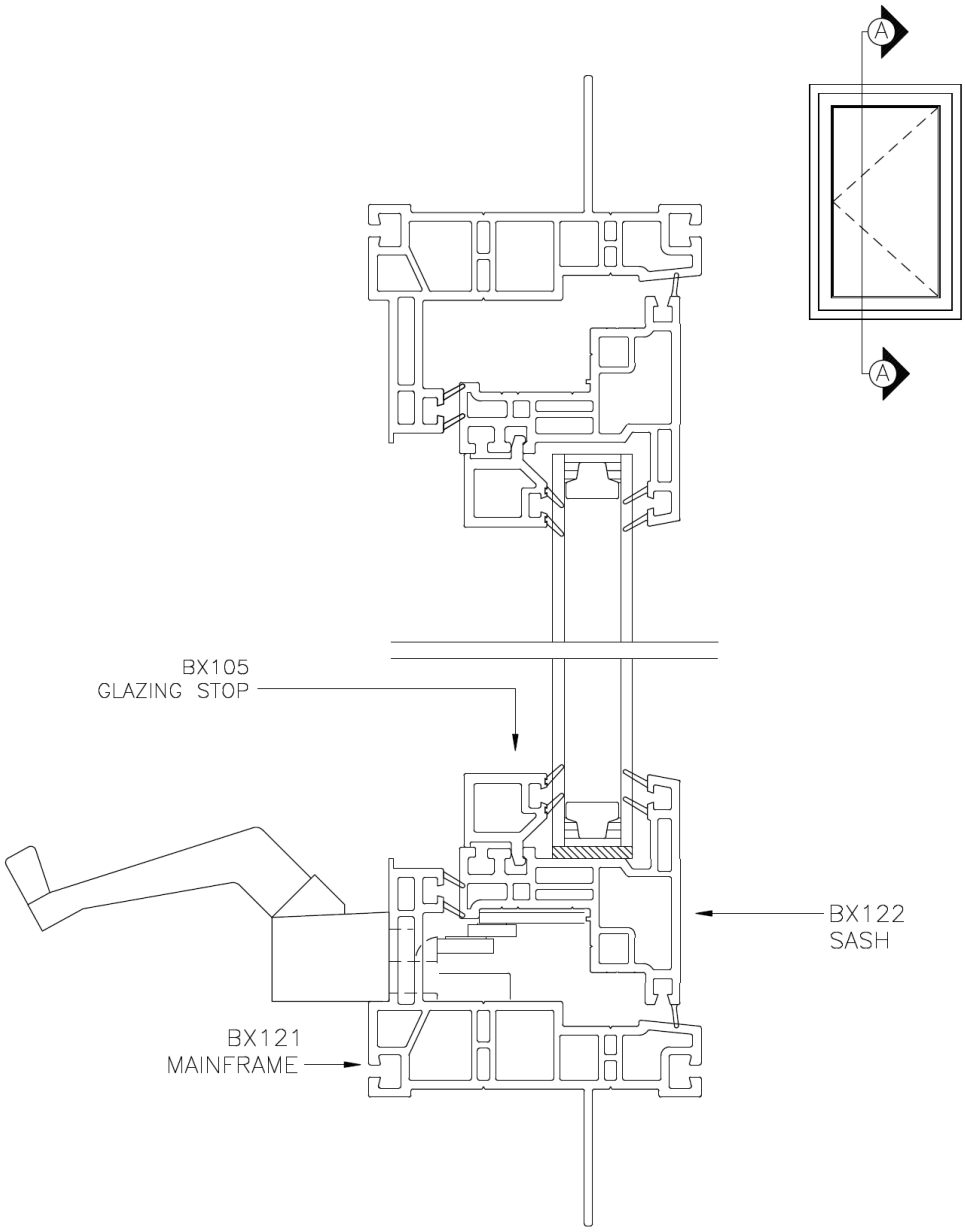

SECTION A – A

VEKA CANADA 4350 – 68 AVENUE EDMONTON, ALBERTA T6B 2P3 CANADA	NOTE: The copyright in this drawing is the property of VEKA CANADA and neither the drawing nor any part of it, nor any information contained therein, shall be reproduced or disclosed to any third party other than for the purpose of the use of the company product.	Part Number:	Casement w/ Rein
		Description:	Vertical Section
		Dwg No./Dwn By:	0104–1; T. Michael
		Date / Revision:	Oct. 18, 2011
		Drawing Size:	NTS

ALL REPORTS ARE THE CONFIDENTIAL PROPERTY OF CLIENTS. PUBLICATION OF STATEMENTS, CONCLUSIONS OR EXTRACTS FROM OR REGARDING OUR REPORTS IS NOT PERMITTED WITHOUT OUR WRITTEN APPROVAL. ANY LIABILITY ATTACHED THERETO IS LIMITED TO THE FEE CHARGED. THE RESULTS OF THIS EVALUATION REPORT PERTAIN ONLY TO THE SPECIFIC SAMPLE(S) EVALUATED.

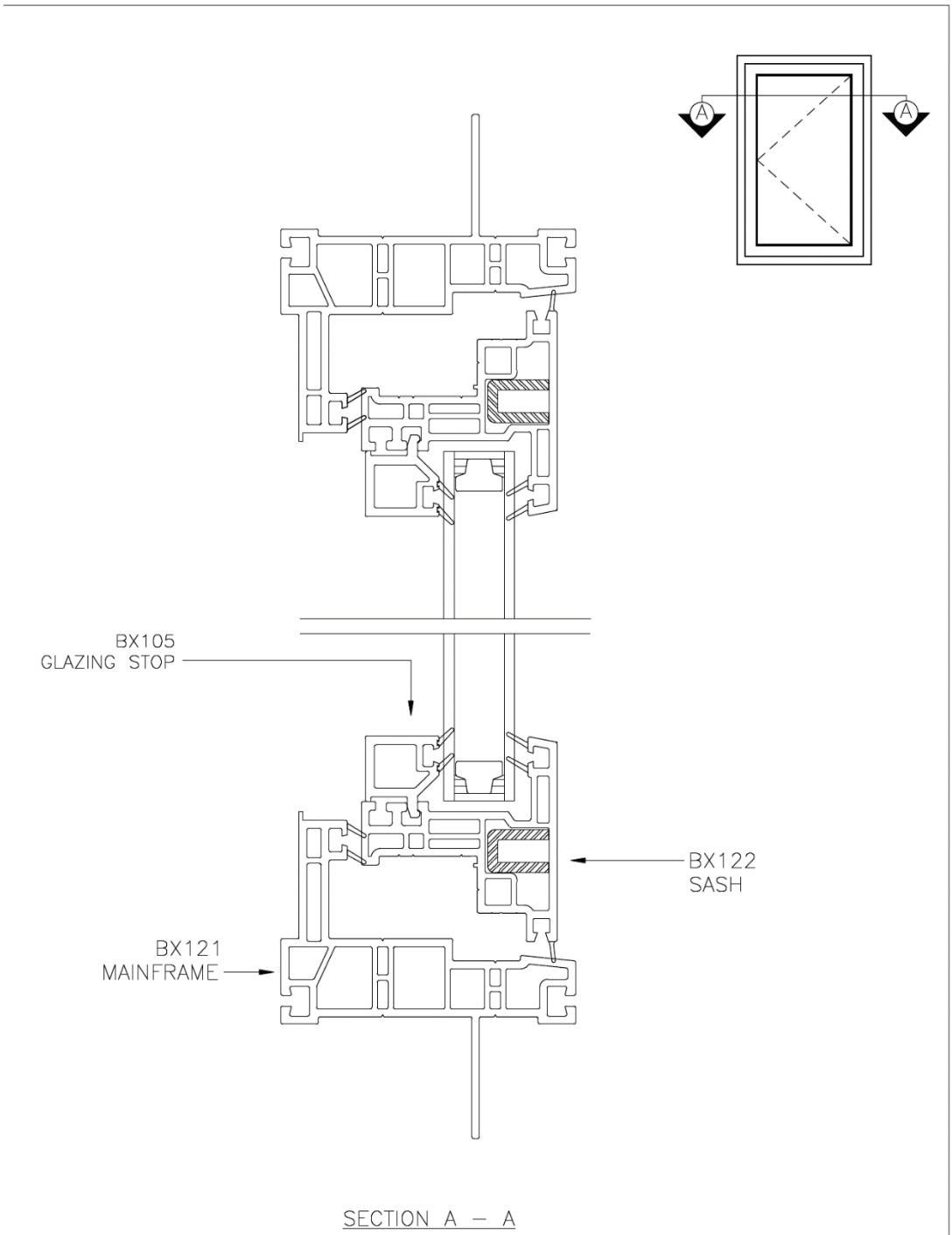

VEKA CANADA 4350 – 68 AVENUE EDMONTON, ALBERTA T6B 2P3 CANADA	NOTE: The copyright in this drawing is the property of VEKA CANADA and neither the drawing nor any part of it, nor any information contained therein, shall be reproduced or disclosed to any third party other than for the purpose of the use of the company product.	Part Number:	Casement w/ Rein
		Description:	Horizontal Section
		Dwg No./Dwn By:	0103–1; T. Michael
		Date / Revision:	Oct. 18, 2011
		Drawing Size:	NTS

ALL REPORTS ARE THE CONFIDENTIAL PROPERTY OF CLIENTS. PUBLICATION OF STATEMENTS, CONCLUSIONS OR EXTRACTS FROM OR REGARDING OUR REPORTS IS NOT PERMITTED WITHOUT OUR WRITTEN APPROVAL. ANY LIABILITY ATTACHED THERETO IS LIMITED TO THE FEE CHARGED. THE RESULTS OF THIS EVALUATION REPORT PERTAIN ONLY TO THE SPECIFIC SAMPLE(S) EVALUATED.

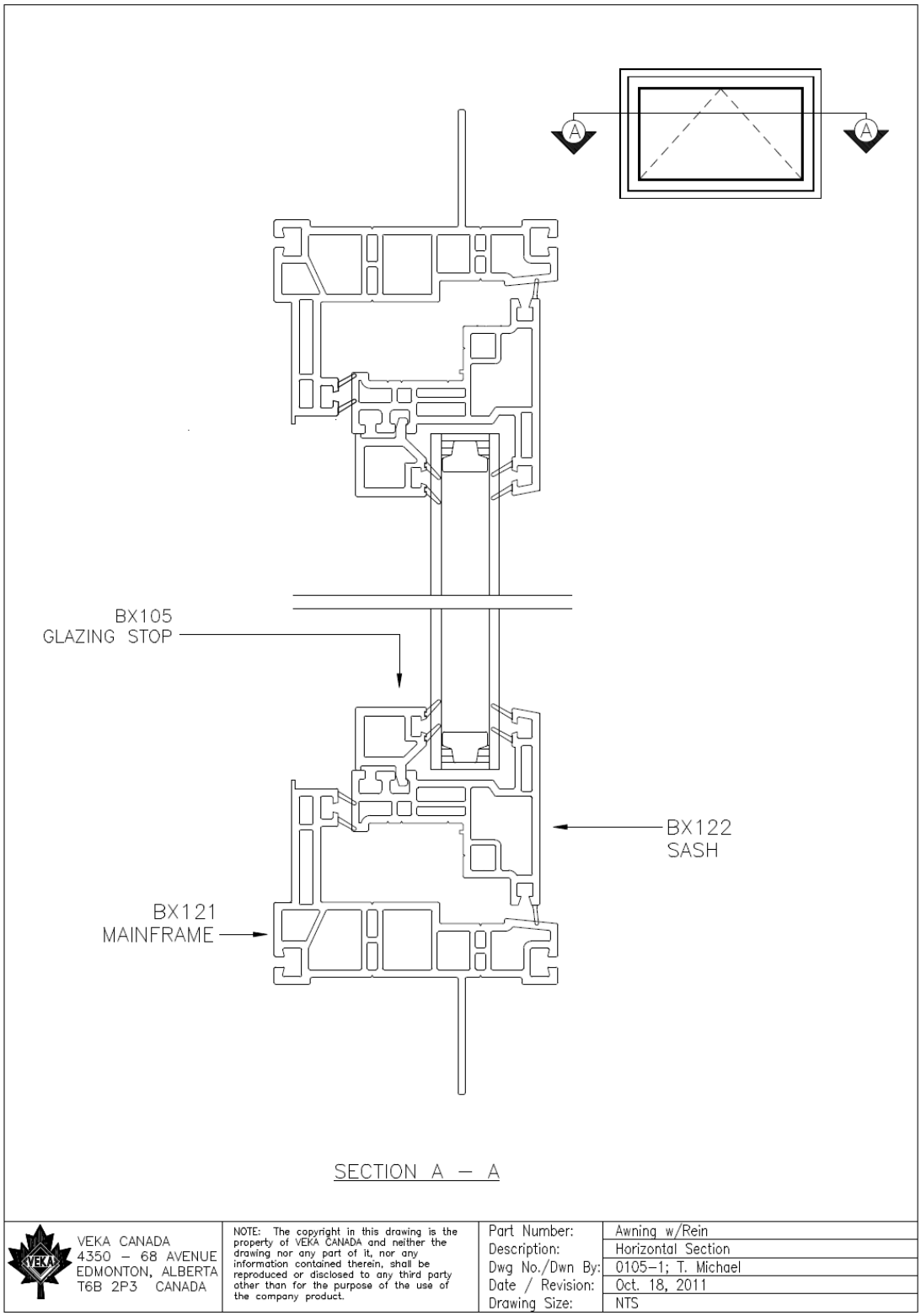

ALL REPORTS ARE THE CONFIDENTIAL PROPERTY OF CLIENTS. PUBLICATION OF STATEMENTS, CONCLUSIONS OR EXTRACTS FROM OR REGARDING OUR REPORTS IS NOT PERMITTED WITHOUT OUR WRITTEN APPROVAL. ANY LIABILITY ATTACHED THERETO IS LIMITED TO THE FEE CHARGED. THE RESULTS OF THIS EVALUATION REPORT PERTAIN ONLY TO THE SPECIFIC SAMPLE(S) EVALUATED.

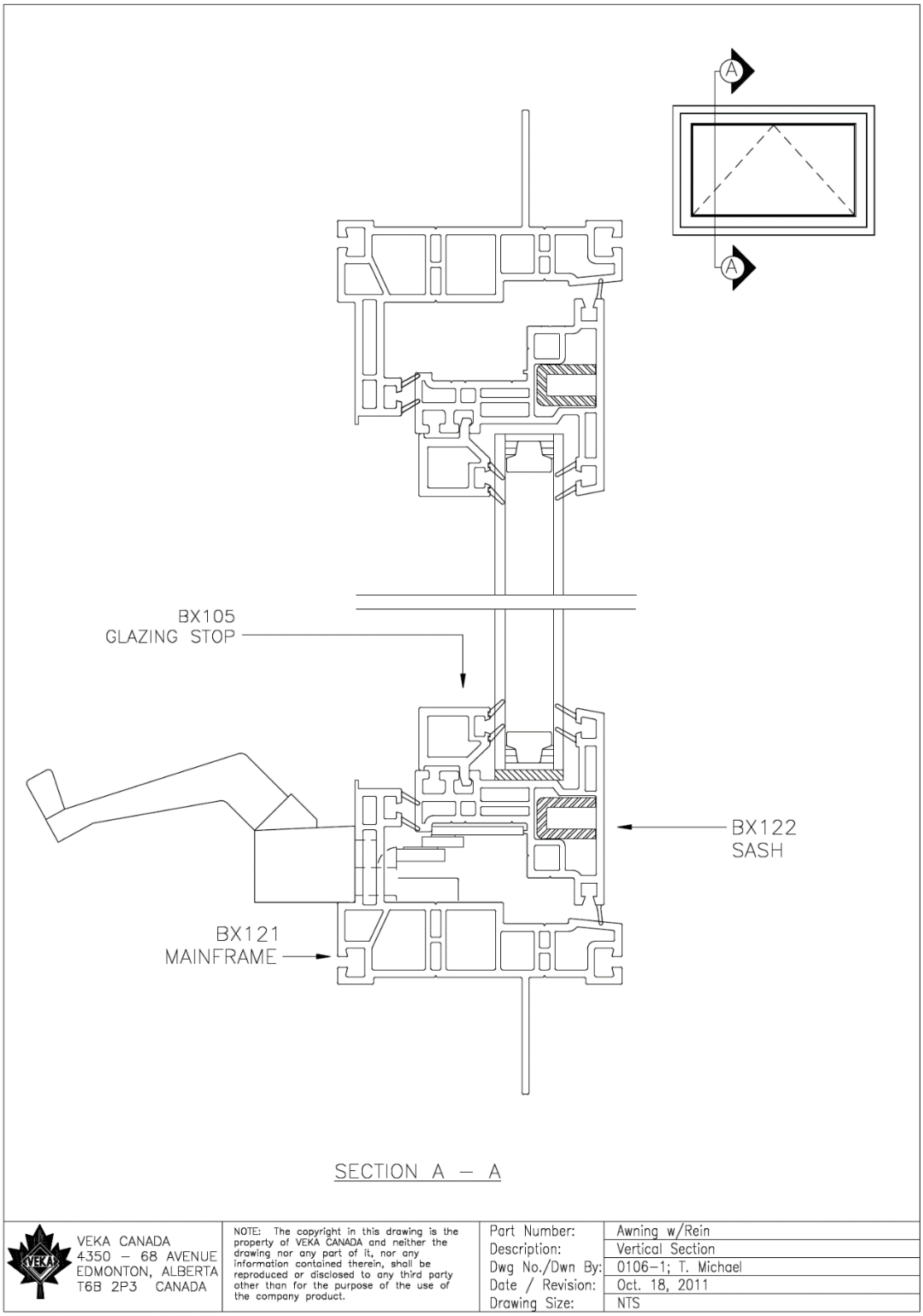

VEKA CANADA 4350 – 68 AVENUE EDMONTON, ALBERTA T6B 2P3 CANADA	NOTE: The copyright in this drawing is the property of VEKA CANADA and neither the drawing nor any part of it, nor any information contained therein, shall be reproduced or disclosed to any third party other than for the purpose of the use of the company product.	Part Number:	Awning w/Rein
		Description:	Vertical Section
		Dwg No./Dwn By:	0106–1; T. Michael
		Date / Revision:	Oct. 18, 2011
		Drawing Size:	NTS

ALL REPORTS ARE THE CONFIDENTIAL PROPERTY OF CLIENTS. PUBLICATION OF STATEMENTS, CONCLUSIONS OR EXTRACTS FROM OR REGARDING OUR REPORTS IS NOT PERMITTED WITHOUT OUR WRITTEN APPROVAL. ANY LIABILITY ATTACHED THERETO IS LIMITED TO THE FEE CHARGED. THE RESULTS OF THIS EVALUATION REPORT PERTAIN ONLY TO THE SPECIFIC SAMPLE(S) EVALUATED.

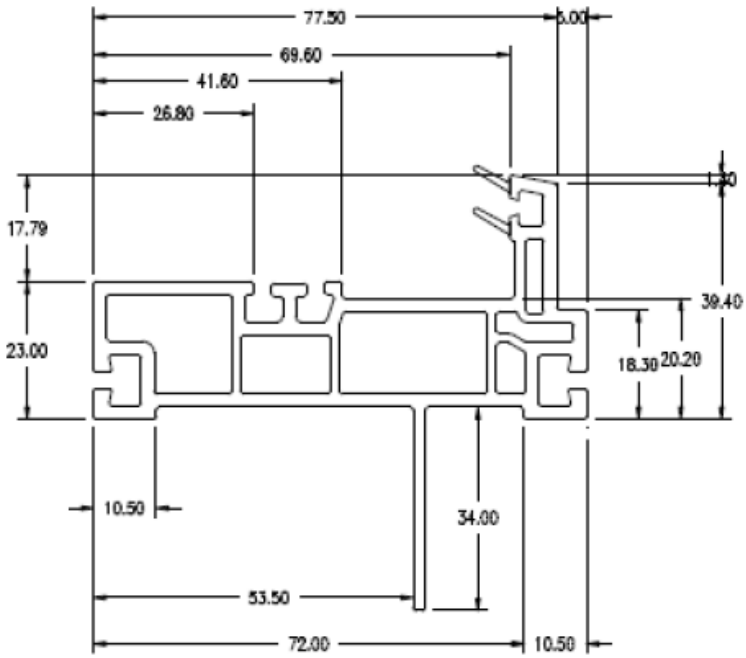

VEKA CANADA 4350 – 68 AVENUE EDMONTON, ALBERTA T6B 2P3 CANADA	NOTE: The copyright in this drawing is the property of Berlaen and neither the drawing nor any part of it, nor any information contained therein, shall be reproduced or disclosed to any third party other than for the purpose of the use of the company product.	Part Number:	BX123
		Description:	PICTURE FRAME w/ Fin
		Dwg No./Dwn By:	BX123
		Date / Revision:	March 16/2005/ REVISION 2
		Drawing Size:	SCALE 1:1

ALL REPORTS ARE THE CONFIDENTIAL PROPERTY OF CLIENTS. PUBLICATION OF STATEMENTS, CONCLUSIONS OR EXTRACTS FROM OR REGARDING OUR REPORTS IS NOT PERMITTED WITHOUT OUR WRITTEN APPROVAL. ANY LIABILITY ATTACHED THERETO IS LIMITED TO THE FEE CHARGED. THE RESULTS OF THIS EVALUATION REPORT PERTAIN ONLY TO THE SPECIFIC SAMPLE(S) EVALUATED.

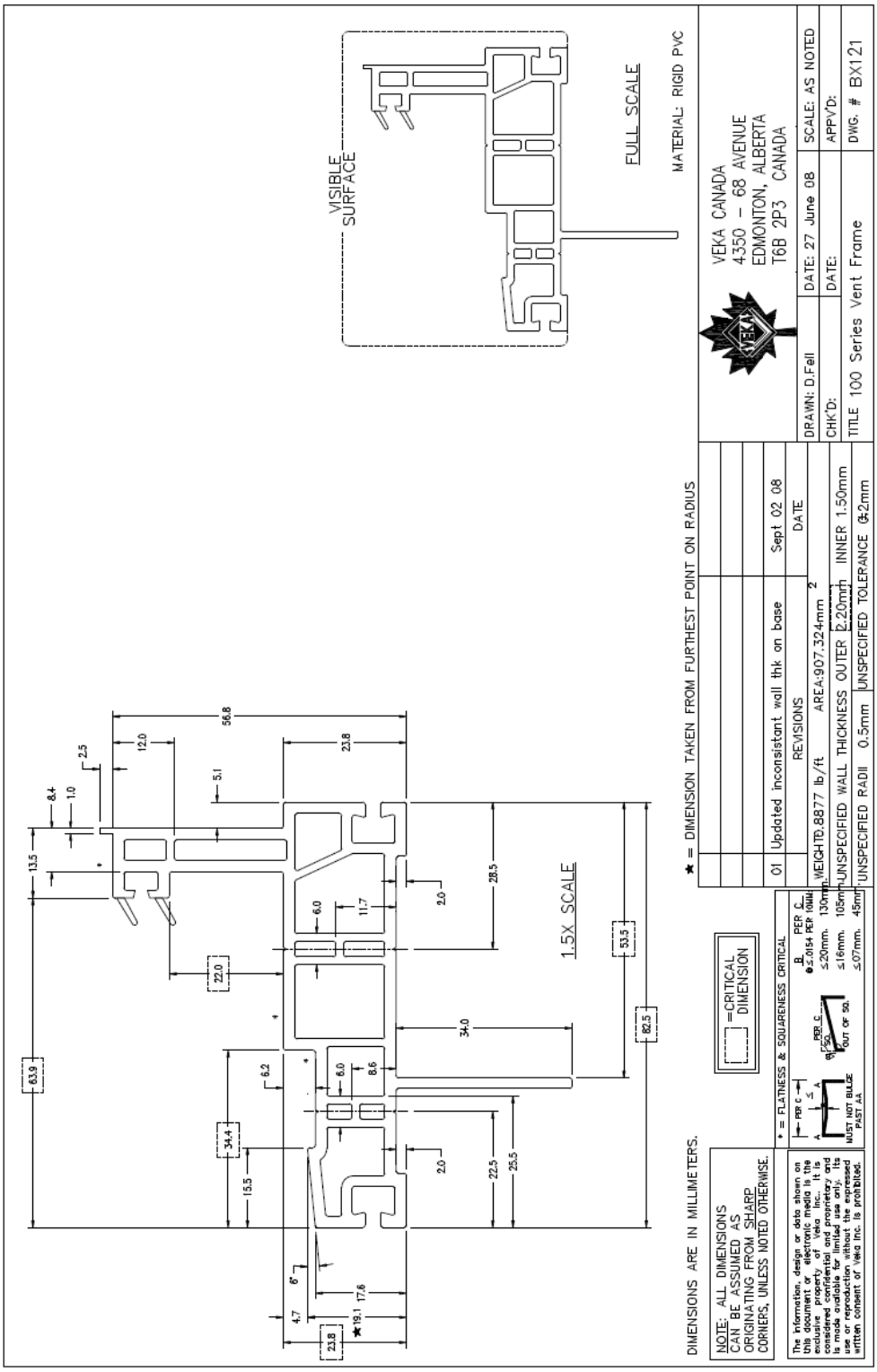

ALL REPORTS ARE THE CONFIDENTIAL PROPERTY OF CLIENTS. PUBLICATION OF STATEMENTS, CONCLUSIONS OR EXTRACTS FROM OR REGARDING OUR REPORTS IS NOT PERMITTED WITHOUT OUR WRITTEN APPROVAL. ANY LIABILITY ATTACHED THERETO IS LIMITED TO THE FEE CHARGED. THE RESULTS OF THIS EVALUATION REPORT PERTAIN ONLY TO THE SPECIFIC SAMPLE(S) EVALUATED.

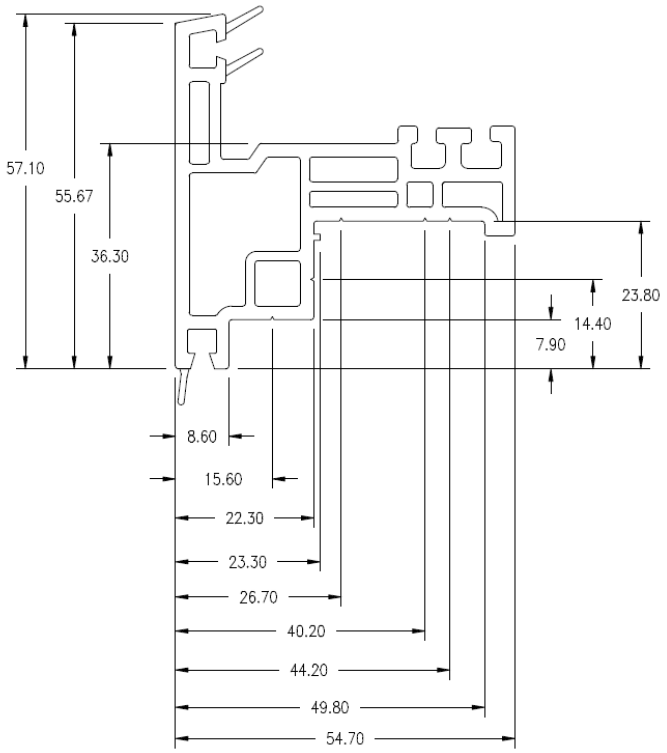

R05	CHANGE NAME FROM BX102 TO BX112	MAR 14/06
	REVISIONS	DATE

VEKA CANADA
4350 – 68 AVENUE
EDMONTON, ALBERTA
T6B 2P3 CANADA

NOTE: The copyright in this drawing is the property of Berlinex and neither the drawing nor any part of it, nor any information contained therein, shall be reproduced or disclosed to any third party other than for the purpose of the use of the company product.

Part Number:	BX122
Description:	Sash Frame w/ perimeter flex
Dwg No./Dwn By:	BX122
Date / Revision:	March 14/2006/REVISION 5
Drawing Size:	SCALE 1:1

ALL REPORTS ARE THE CONFIDENTIAL PROPERTY OF CLIENTS. PUBLICATION OF STATEMENTS, CONCLUSIONS OR EXTRACTS FROM OR REGARDING OUR REPORTS IS NOT PERMITTED WITHOUT OUR WRITTEN APPROVAL. ANY LIABILITY ATTACHED THERETO IS LIMITED TO THE FEE CHARGED. THE RESULTS OF THIS EVALUATION REPORT PERTAIN ONLY TO THE SPECIFIC SAMPLE(S) EVALUATED.

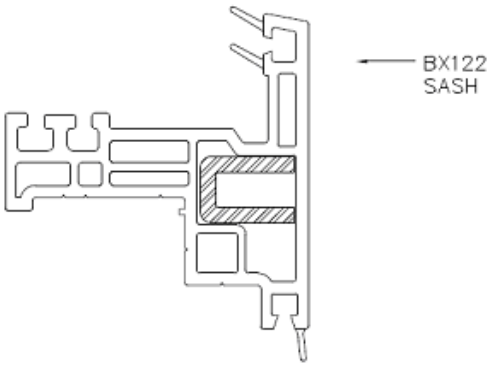

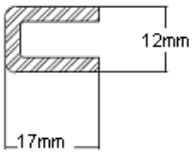

BX6102
12 Gauge Galvanized
Steel

Ext. Wall Thks.:	–
Int. Wall Thks.:	–
Not Spec. Radii:	–
Overall Area:	–
Overall Weight:	–
Rigid Weight:	–
Flex Weight:	–

REVISIONS	DATE

VEKA CANADA
4350 – 68 AVENUE
EDMONTON, ALBERTA
T6B 2P3 CANADA

NOTE: The copyright in this drawing is the property of VEKA CANADA and neither the drawing nor any part of it, nor any information contained therein, shall be reproduced or disclosed to any third party other than for the purpose of the use of

Part Number:	BX6102
Description:	BX122 Sash Reinforcement
Dwg No./Dwn By:	BX6102 / D.Fell
Date / Revision:	March 25/2008/02

ALL REPORTS ARE THE CONFIDENTIAL PROPERTY OF CLIENTS. PUBLICATION OF STATEMENTS, CONCLUSIONS OR EXTRACTS FROM OR REGARDING OUR REPORTS IS NOT PERMITTED WITHOUT OUR WRITTEN APPROVAL. ANY LIABILITY ATTACHED THERETO IS LIMITED TO THE FEE CHARGED. THE RESULTS OF THIS EVALUATION REPORT PERTAIN ONLY TO THE SPECIFIC SAMPLE(S) EVALUATED.

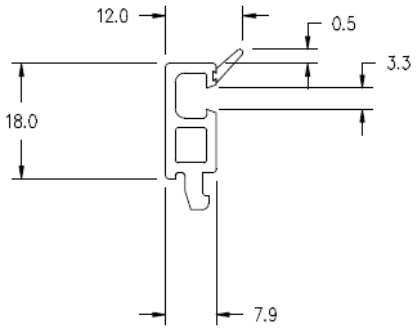

Ext. Wall Thks.:	1.5mm			
Int. Wall Thks.:	–			
Not Spec. Radii:	0.5mm			
Overall Area:	93.903 mm²			
Overall Weight:	136.723 g/m [0.0918 lb/ft]	01	Area/weight update.	Feb 19 08
Rigid Weight:	125.517 g/m [0.0843 lb/ft]		Flex updated, secondary flex key removed.	Feb 19 08
Flex Weight:	11.206 g/m [0.0075 lb/ft]		REVISIONS	DATE

VEKA CANADA
4350 – 68 AVENUE
EDMONTON, ALBERTA
T6B 2P3 CANADA

NOTE: The copyright in this drawing is the property of VEKA CANADA and neither the drawing nor any part of it, nor any information contained therein, shall be reproduced or disclosed to any third party other than for the purpose of the use of the company product.

Part Number:	BX756
Description:	Triple Glazing Stop (1 5/16")
Dwg No./Dwn By:	BX756
Date / Revision:	Feb 19/2008/02
Drawing Size:	Scale: 1:1

ALL REPORTS ARE THE CONFIDENTIAL PROPERTY OF CLIENTS. PUBLICATION OF STATEMENTS, CONCLUSIONS OR EXTRACTS FROM OR REGARDING OUR REPORTS IS NOT PERMITTED WITHOUT OUR WRITTEN APPROVAL. ANY LIABILITY ATTACHED THERETO IS LIMITED TO THE FEE CHARGED. THE RESULTS OF THIS EVALUATION REPORT PERTAIN ONLY TO THE SPECIFIC SAMPLE(S) EVALUATED.

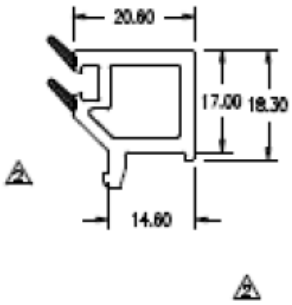

3.	REVISE SNAP LEG	24 SEPT 10
2.	REVISE SNAP LEG	27 JAN 10
R03	SNAP IN LEG BEEFED UP	JUN 19/06
	REVISIONS	DATE

VEKA CANADA
4350 – 68 AVENUE
EDMONTON, ALBERTA
T6B 2P5 CANADA

NOTE: The copyright in this drawing is the property of VEKA CANADA and neither the drawing nor any part of it, nor any information contained herein, shall be reproduced or disclosed to any third party other than for the purpose of the use of the company product.

Part Number:	BK105
Description:	3/4" GLAZING STOP
Dwg No./Dwn By:	BK105
Date / Revision:	June 19/2006/REVISION 3
Drawing Size:	SCALE: 1:1 unless otherwise specified

ALL REPORTS ARE THE CONFIDENTIAL PROPERTY OF CLIENTS. PUBLICATION OF STATEMENTS, CONCLUSIONS OR EXTRACTS FROM OR REGARDING OUR REPORTS IS NOT PERMITTED WITHOUT OUR WRITTEN APPROVAL. ANY LIABILITY ATTACHED THERETO IS LIMITED TO THE FEE CHARGED. THE RESULTS OF THIS EVALUATION REPORT PERTAIN ONLY TO THE SPECIFIC SAMPLE(S) EVALUATED.

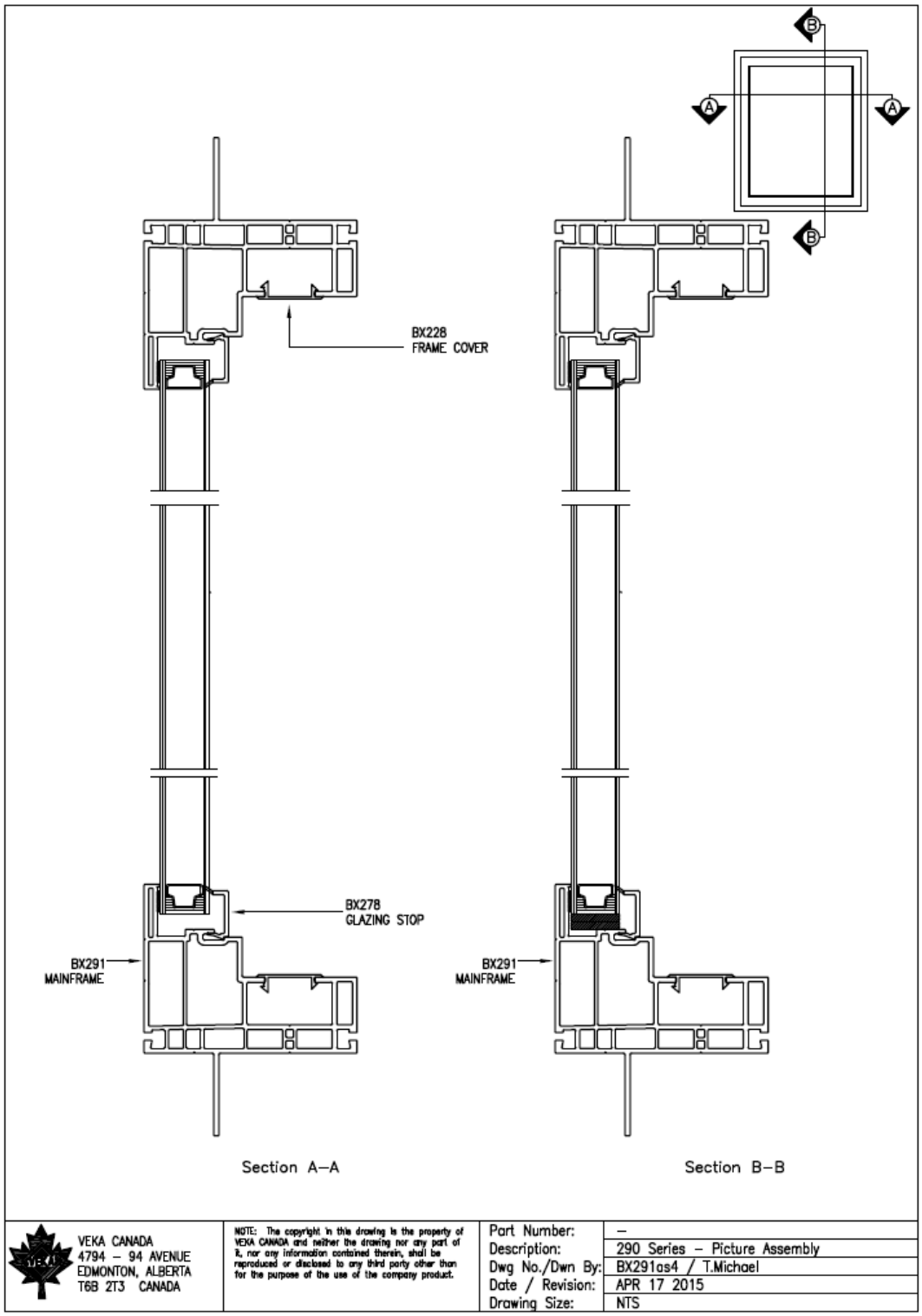

ALL REPORTS ARE THE CONFIDENTIAL PROPERTY OF CLIENTS. PUBLICATION OF STATEMENTS, CONCLUSIONS OR EXTRACTS FROM OR REGARDING OUR REPORTS IS NOT PERMITTED WITHOUT OUR WRITTEN APPROVAL. ANY LIABILITY ATTACHED THERETO IS LIMITED TO THE FEE CHARGED. THE RESULTS OF THIS EVALUATION REPORT PERTAIN ONLY TO THE SPECIFIC SAMPLE(S) EVALUATED.

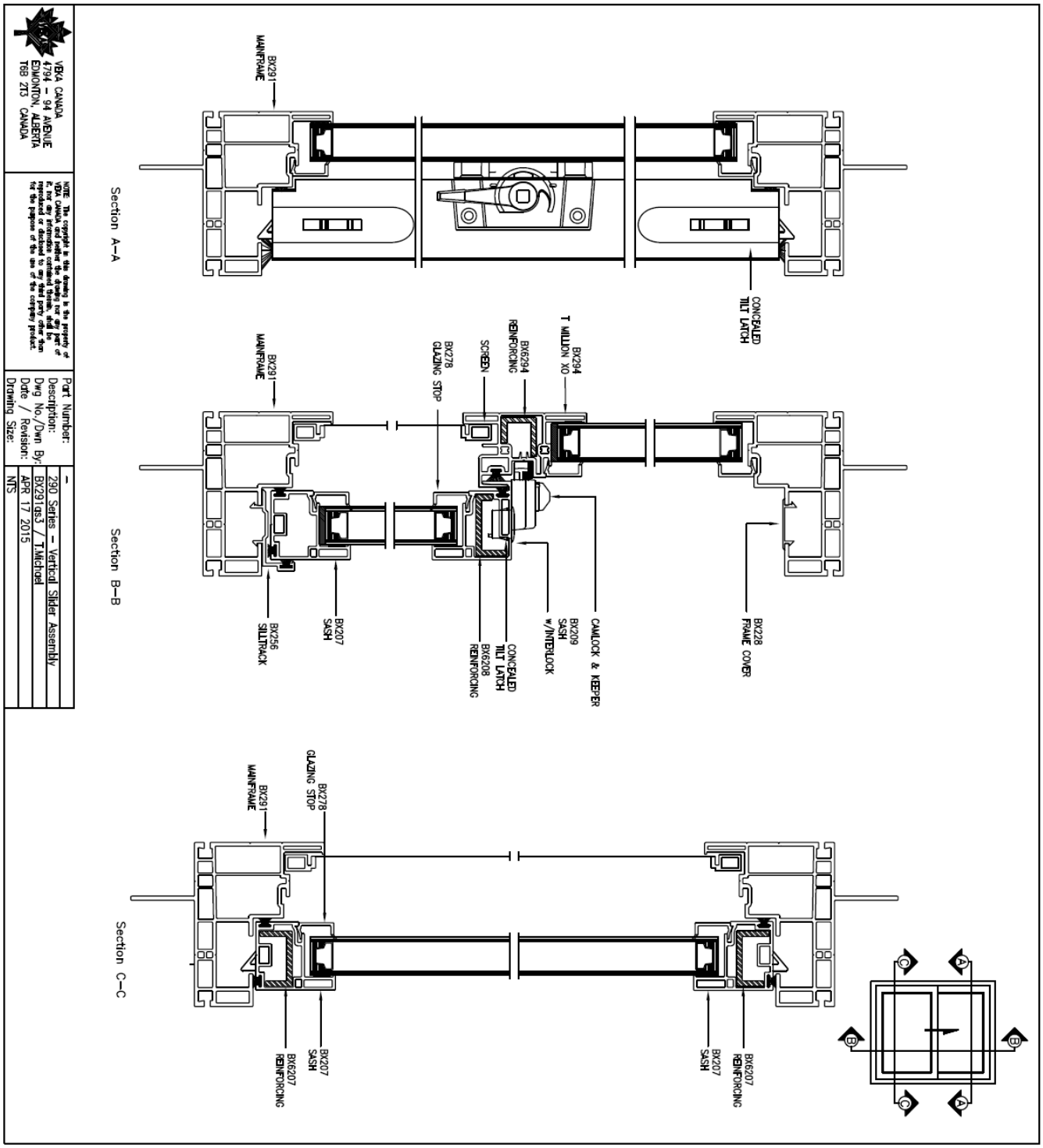

ALL REPORTS ARE THE CONFIDENTIAL PROPERTY OF CLIENTS. PUBLICATION OF STATEMENTS, CONCLUSIONS OR EXTRACTS FROM OR REGARDING OUR REPORTS IS NOT PERMITTED WITHOUT OUR WRITTEN APPROVAL. ANY LIABILITY ATTACHED THERETO IS LIMITED TO THE FEE CHARGED. THE RESULTS OF THIS EVALUATION REPORT PERTAIN ONLY TO THE SPECIFIC SAMPLE(S) EVALUATED.

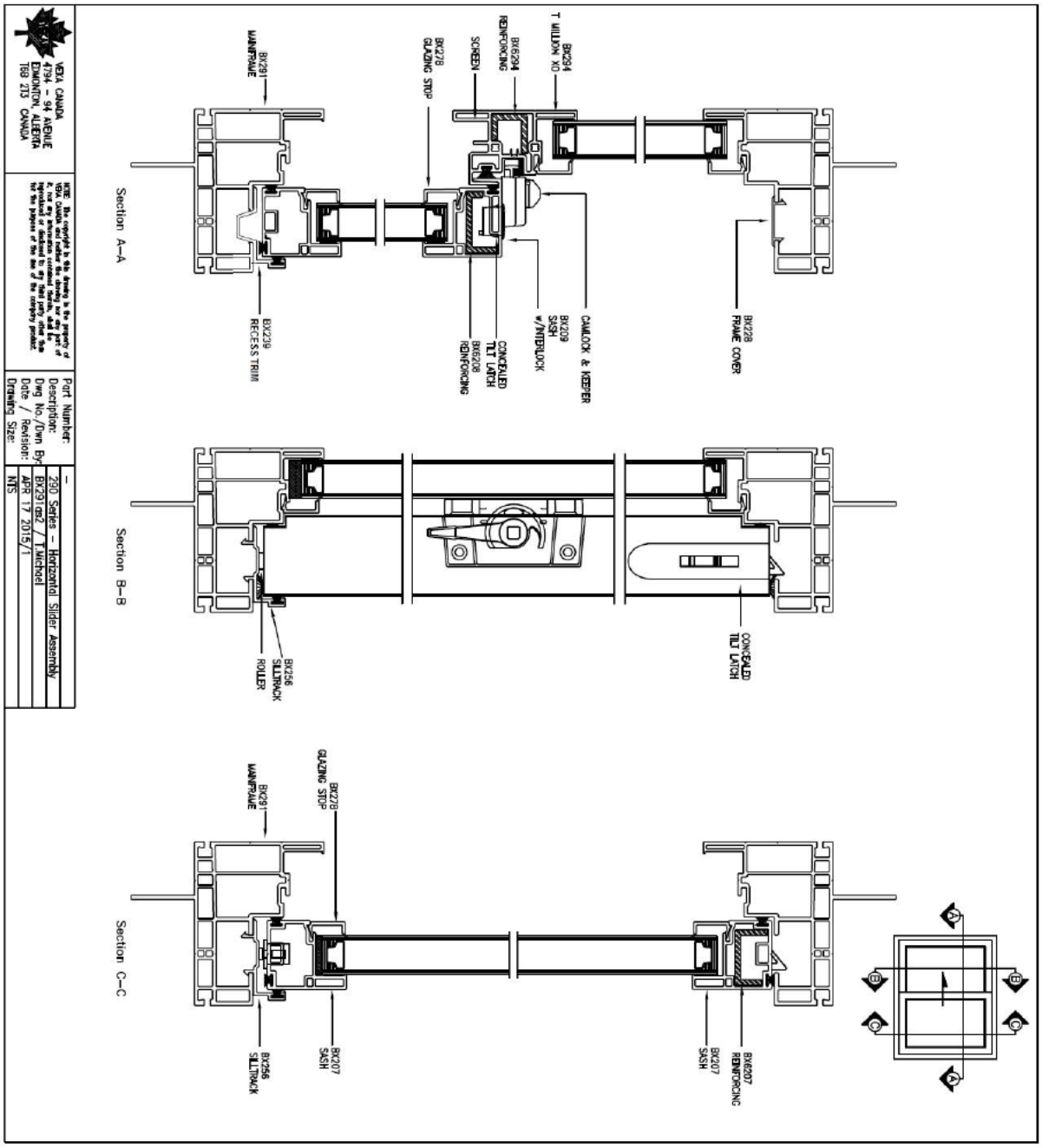

ALL REPORTS ARE THE CONFIDENTIAL PROPERTY OF CLIENTS. PUBLICATION OF STATEMENTS, CONCLUSIONS OR EXTRACTS FROM OR REGARDING OUR REPORTS IS NOT PERMITTED WITHOUT OUR WRITTEN APPROVAL. ANY LIABILITY ATTACHED THERETO IS LIMITED TO THE FEE CHARGED. THE RESULTS OF THIS EVALUATION REPORT PERTAIN ONLY TO THE SPECIFIC SAMPLE(S) EVALUATED.

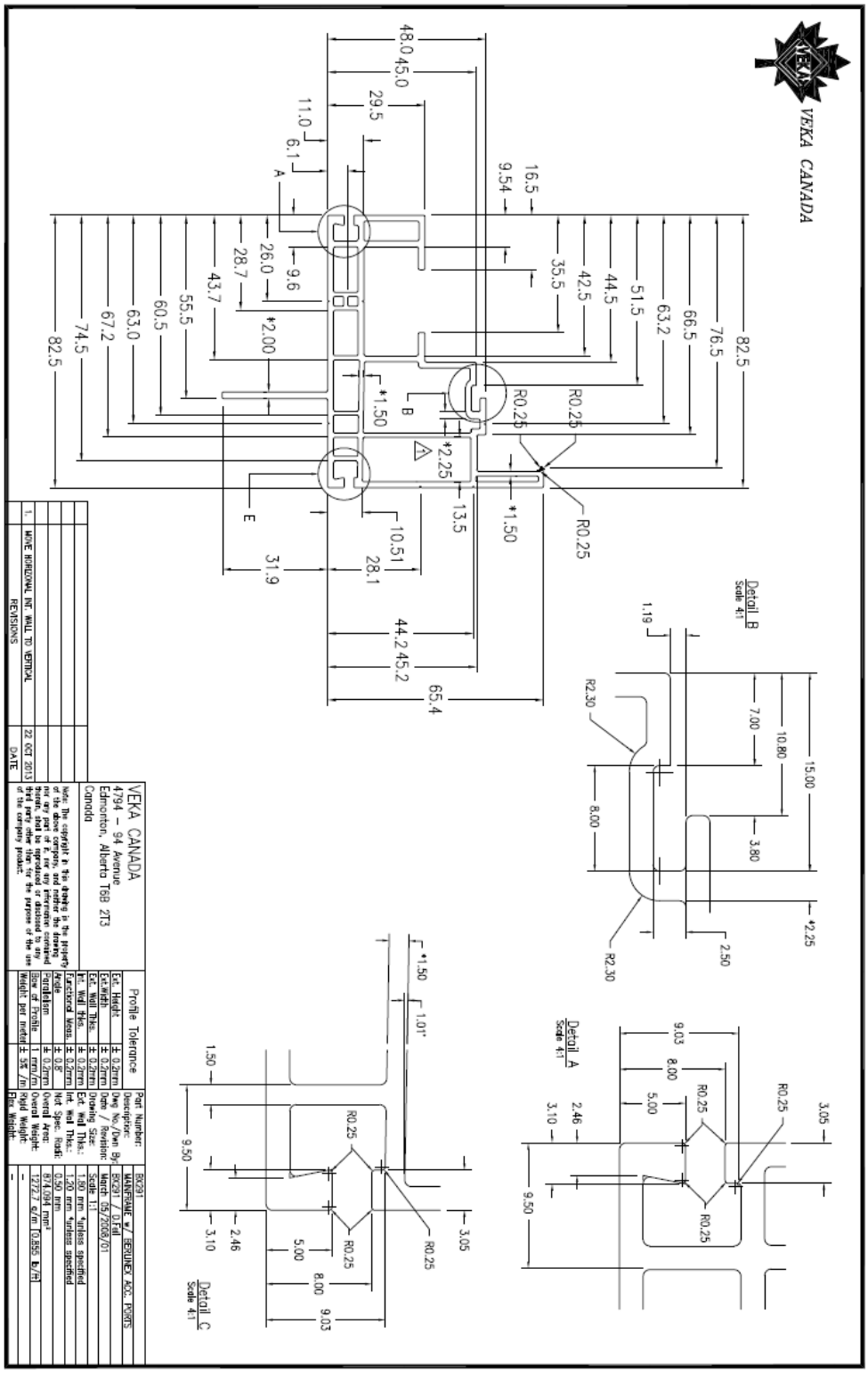

ALL REPORTS ARE THE CONFIDENTIAL PROPERTY OF CLIENTS. PUBLICATION OF STATEMENTS, CONCLUSIONS OR EXTRACTS FROM OR REGARDING OUR REPORTS IS NOT PERMITTED WITHOUT OUR WRITTEN APPROVAL. ANY LIABILITY ATTACHED THERETO IS LIMITED TO THE FEE CHARGED. THE RESULTS OF THIS EVALUATION REPORT PERTAIN ONLY TO THE SPECIFIC SAMPLE(S) EVALUATED.

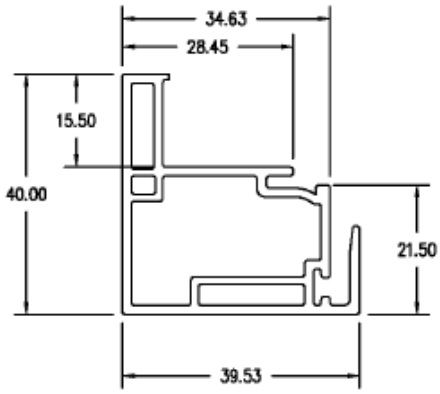

	REVISIONS	DATE

VEKA CANADA
4350 – 68 AVENUE
EDMONTON, ALBERTA
T6B 2P3 CANADA

NOTE: The copyright in this drawing is the property of Beaflow and neither the drawing nor any part of it, nor any information contained therein, shall be reproduced or disclosed to any third party other than for the purpose of the use of the company product.

Part Number:	BX209
Description:	Box Sash w/ Interlock
Dwg No./Dwn By:	BX209
Date / Revision:	February 25/2005/01
Drawing Size:	Scale: 1:1

ALL REPORTS ARE THE CONFIDENTIAL PROPERTY OF CLIENTS. PUBLICATION OF STATEMENTS, CONCLUSIONS OR EXTRACTS FROM OR REGARDING OUR REPORTS IS NOT PERMITTED WITHOUT OUR WRITTEN APPROVAL. ANY LIABILITY ATTACHED THERETO IS LIMITED TO THE FEE CHARGED. THE RESULTS OF THIS EVALUATION REPORT PERTAIN ONLY TO THE SPECIFIC SAMPLE(S) EVALUATED.

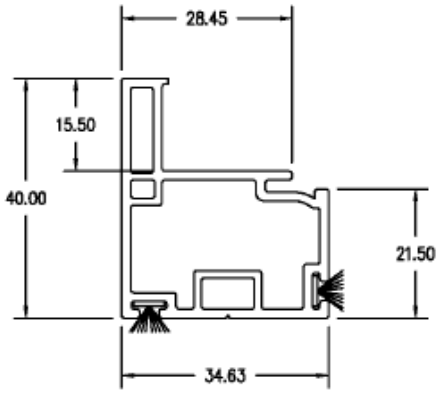

VEKA CANADA 4350 – 68 AVENUE EDMONTON, ALBERTA T6B 2P3 CANADA	NOTE: The copyright in this drawing is the property of Bellinex and neither the drawing nor any part of it, nor any information contained therein, shall be reproduced or disclosed to any third party other than for the purpose of the use of the company product.	Part Number:	BX207
		Description:	Box Sash
		Dwg No./Dwn By:	BX207
		Date / Revision:	February 25/2005/01
		Drawing Size:	Scale: 1:1

ALL REPORTS ARE THE CONFIDENTIAL PROPERTY OF CLIENTS. PUBLICATION OF STATEMENTS, CONCLUSIONS OR EXTRACTS FROM OR REGARDING OUR REPORTS IS NOT PERMITTED WITHOUT OUR WRITTEN APPROVAL. ANY LIABILITY ATTACHED THERETO IS LIMITED TO THE FEE CHARGED. THE RESULTS OF THIS EVALUATION REPORT PERTAIN ONLY TO THE SPECIFIC SAMPLE(S) EVALUATED.

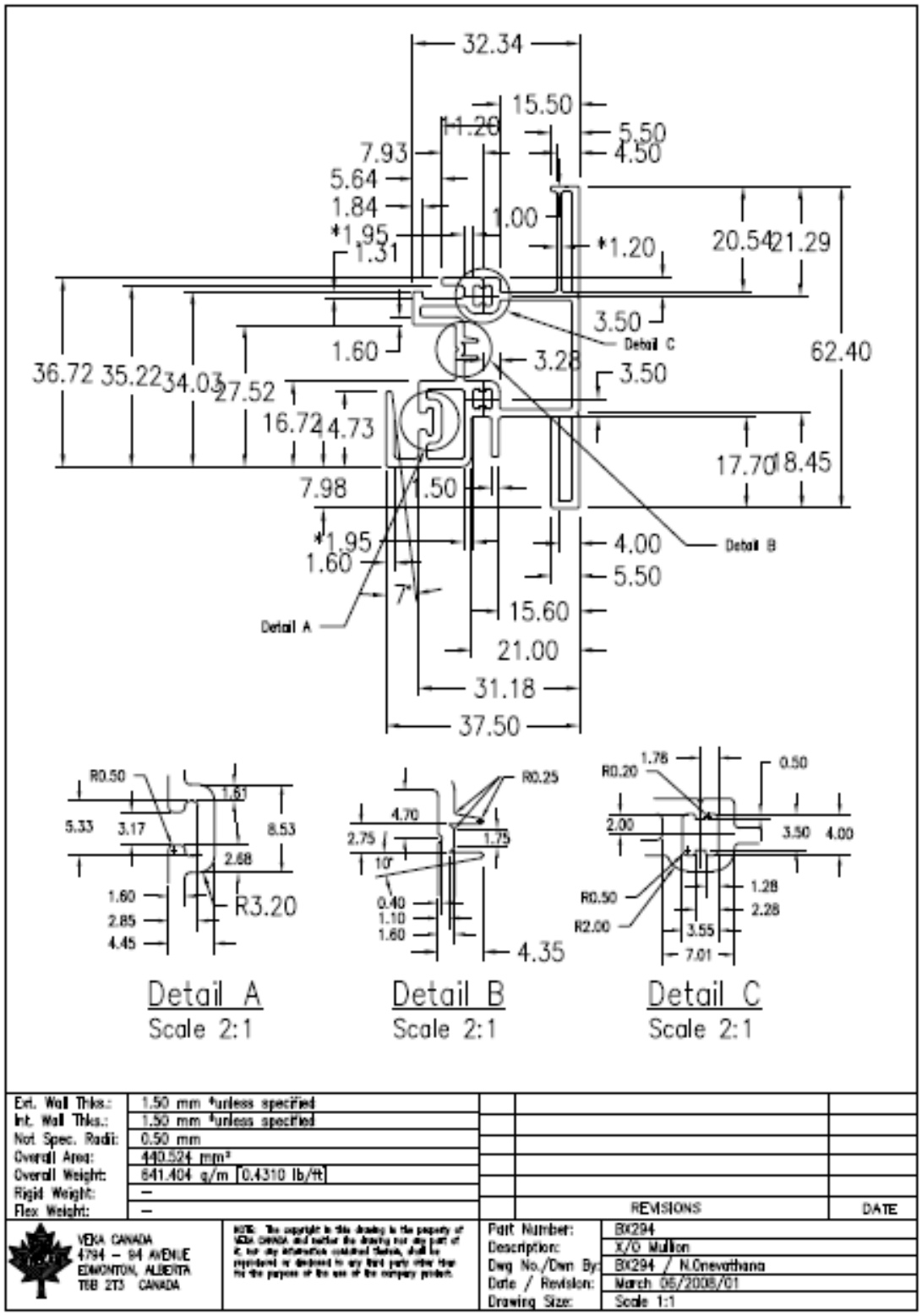

ALL REPORTS ARE THE CONFIDENTIAL PROPERTY OF CLIENTS. PUBLICATION OF STATEMENTS, CONCLUSIONS OR EXTRACTS FROM OR REGARDING OUR REPORTS IS NOT PERMITTED WITHOUT OUR WRITTEN APPROVAL. ANY LIABILITY ATTACHED THERETO IS LIMITED TO THE FEE CHARGED. THE RESULTS OF THIS EVALUATION REPORT PERTAIN ONLY TO THE SPECIFIC SAMPLE(S) EVALUATED.

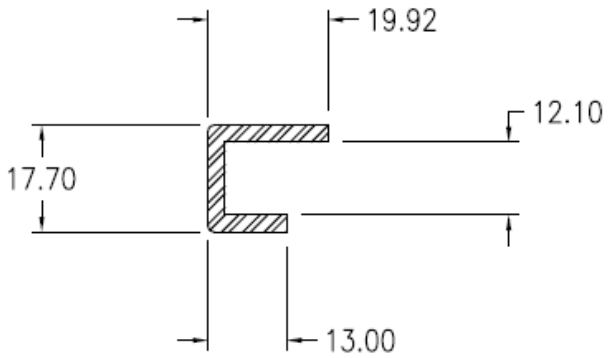

BX6294
(12 Gauge galvanized steel)

BX294

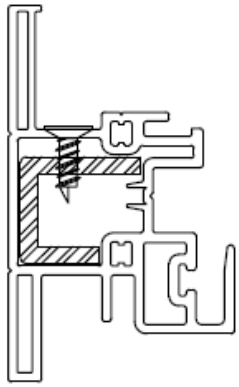

Ext. Wall Thks.:	–
Int. Wall Thks.:	–
Not Spec. Radii:	–
Overall Area:	–
Overall Weight:	–
Rigid Weight:	–
Flex Weight:	–

REVISIONS	DATE

VEKA CANADA
4350 – 68 AVENUE
EDMONTON, ALBERTA
T6B 2P3 CANADA

NOTE: The copyright in this drawing is the property of VEKA CANADA and neither the drawing nor any part of it, nor any information contained therein, shall be reproduced or disclosed to any third party other than for the purpose of the use of the company product.

Part Number:	BX6294
Description:	BX294 XO Mullion Reinforcement
Dwg No./Dwn By:	BX6294 / D.Feil
Date / Revision:	Aug 14 2009
Drawing Size:	Scale 1:1

ALL REPORTS ARE THE CONFIDENTIAL PROPERTY OF CLIENTS. PUBLICATION OF STATEMENTS, CONCLUSIONS OR EXTRACTS FROM OR REGARDING OUR REPORTS IS NOT PERMITTED WITHOUT OUR WRITTEN APPROVAL. ANY LIABILITY ATTACHED THERETO IS LIMITED TO THE FEE CHARGED. THE RESULTS OF THIS EVALUATION REPORT PERTAIN ONLY TO THE SPECIFIC SAMPLE(S) EVALUATED.

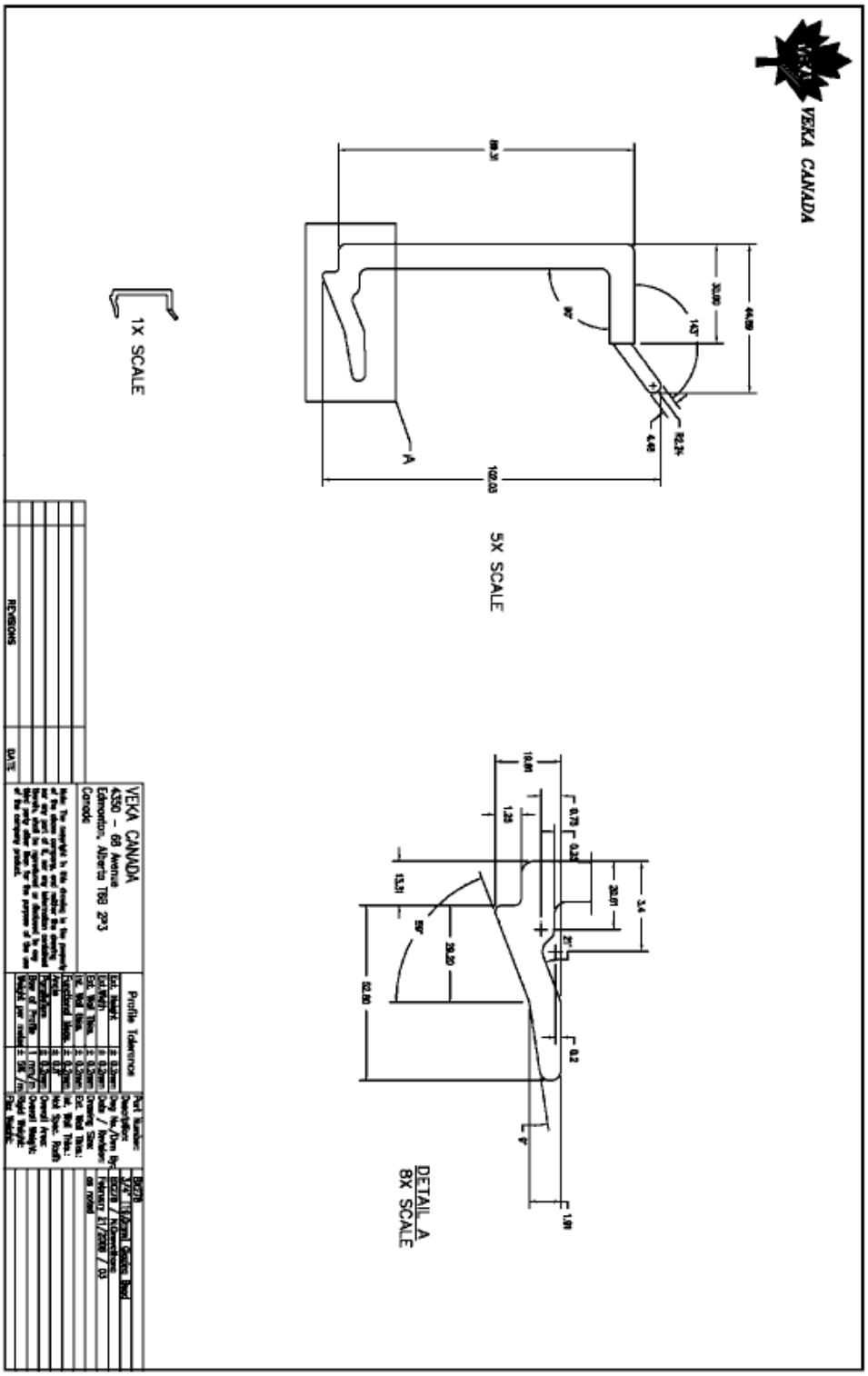

ALL REPORTS ARE THE CONFIDENTIAL PROPERTY OF CLIENTS. PUBLICATION OF STATEMENTS, CONCLUSIONS OR EXTRACTS FROM OR REGARDING OUR REPORTS IS NOT PERMITTED WITHOUT OUR WRITTEN APPROVAL. ANY LIABILITY ATTACHED THERETO IS LIMITED TO THE FEE CHARGED. THE RESULTS OF THIS EVALUATION REPORT PERTAIN ONLY TO THE SPECIFIC SAMPLE(S) EVALUATED.

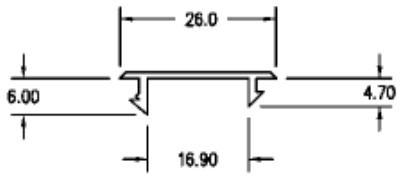

	REVISIONS	DATE

VEKA CANADA
4350 – 68 AVENUE
EDMONTON, ALBERTA
T6B 2P3 CANADA

NOTE: The copyright in this drawing is the property of VEKA CANADA and neither the drawing nor any part of it, nor any information contained therein, shall be reproduced or disclosed to any third party other than for the purpose of the use of the company product.

Part Number:	BX228
Description:	TRIM
Dwg No./Dwn By:	BX228 / D.Fell
Date / Revision:	June 06/2002/05
Drawing Size:	SCALE 1:1

ALL REPORTS ARE THE CONFIDENTIAL PROPERTY OF CLIENTS. PUBLICATION OF STATEMENTS, CONCLUSIONS OR EXTRACTS FROM OR REGARDING OUR REPORTS IS NOT PERMITTED WITHOUT OUR WRITTEN APPROVAL. ANY LIABILITY ATTACHED THERETO IS LIMITED TO THE FEE CHARGED. THE RESULTS OF THIS EVALUATION REPORT PERTAIN ONLY TO THE SPECIFIC SAMPLE(S) EVALUATED.

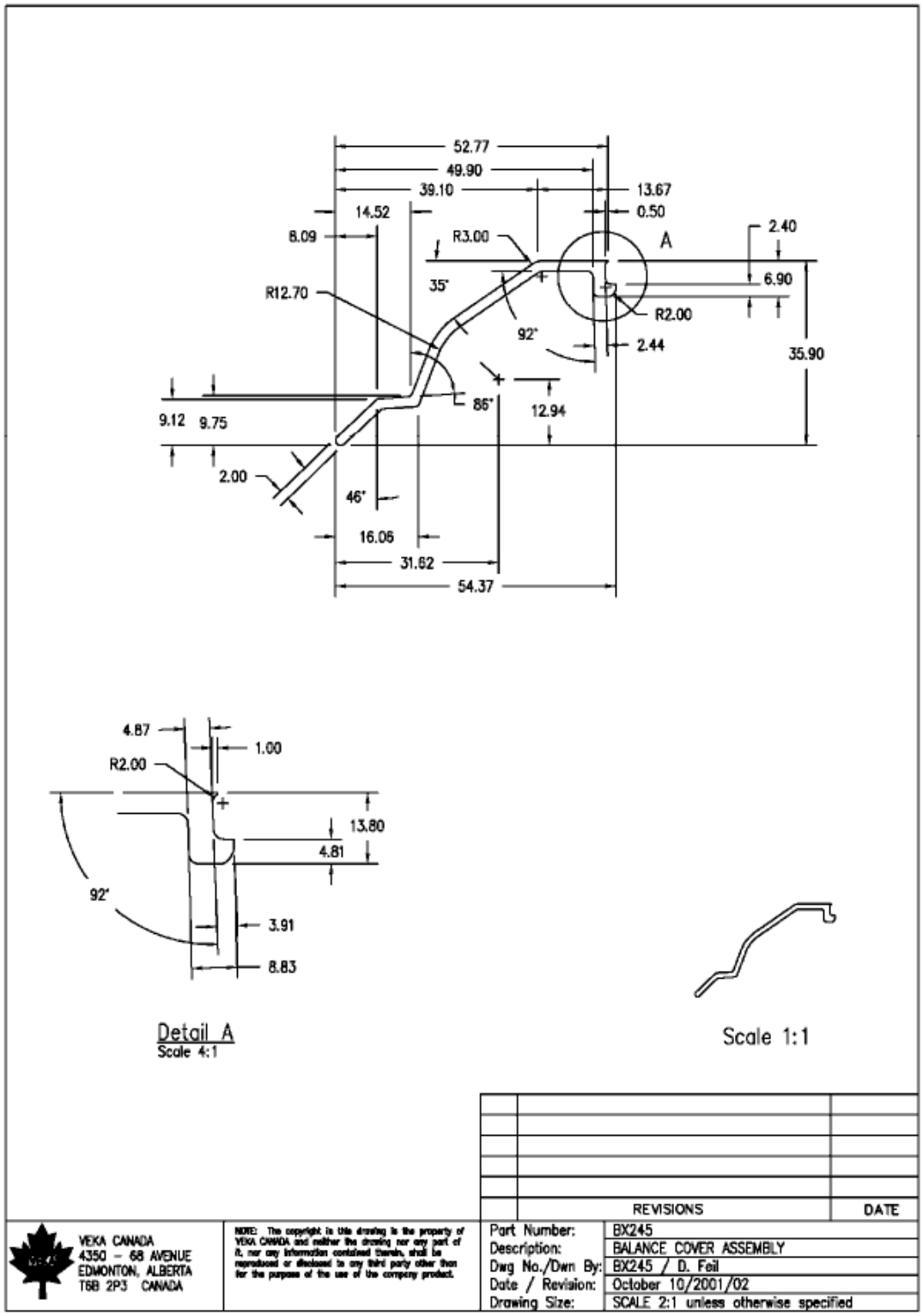

ALL REPORTS ARE THE CONFIDENTIAL PROPERTY OF CLIENTS. PUBLICATION OF STATEMENTS, CONCLUSIONS OR EXTRACTS FROM OR REGARDING OUR REPORTS IS NOT PERMITTED WITHOUT OUR WRITTEN APPROVAL. ANY LIABILITY ATTACHED THERETO IS LIMITED TO THE FEE CHARGED. THE RESULTS OF THIS EVALUATION REPORT PERTAIN ONLY TO THE SPECIFIC SAMPLE(S) EVALUATED.

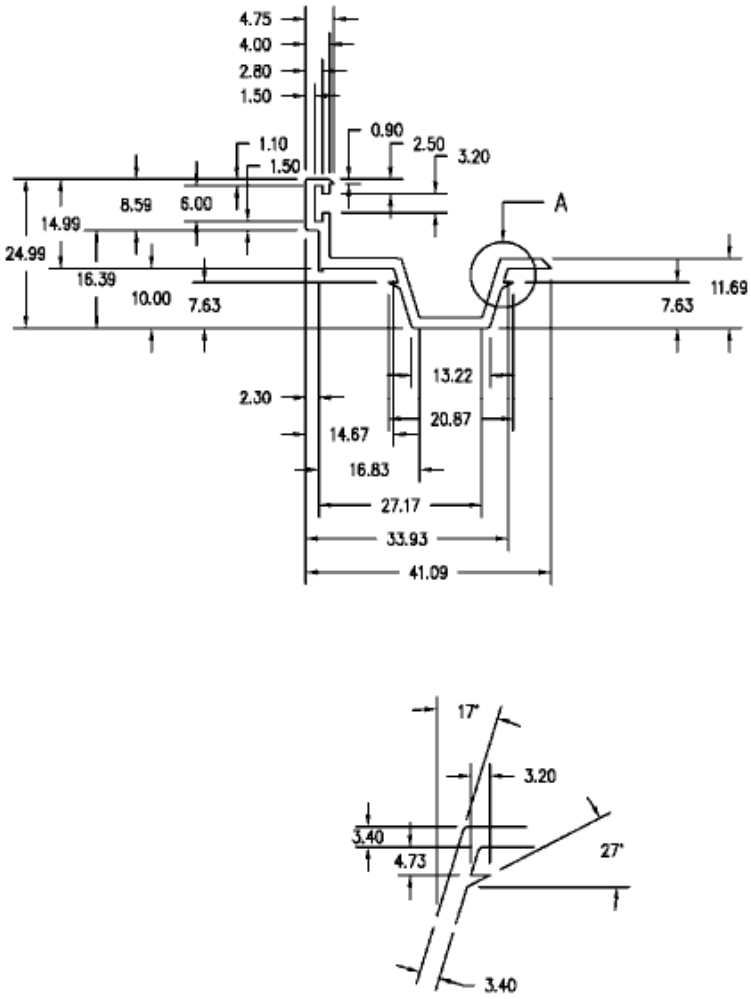

	REVISIONS	DATE

VEKA CANADA
4350 – 68 AVENUE
EDMONTON, ALBERTA
T6B 2P3 CANADA

NOTE: The copyright in this drawing is the property of VEKA CANADA and neither the drawing nor any part of it, nor any information contained therein, shall be reproduced or disclosed to any third party other than for the purpose of the use of the company product.

Part Number:	BX239
Description:	RECESS TRIM
Dwg No./Dwn By:	BX239 / D.Fell
Date / Revision:	October 10/2001/02
Drawing Size:	Scale 1:1

ALL REPORTS ARE THE CONFIDENTIAL PROPERTY OF CLIENTS. PUBLICATION OF STATEMENTS, CONCLUSIONS OR EXTRACTS FROM OR REGARDING OUR REPORTS IS NOT PERMITTED WITHOUT OUR WRITTEN APPROVAL. ANY LIABILITY ATTACHED THERETO IS LIMITED TO THE FEE CHARGED. THE RESULTS OF THIS EVALUATION REPORT PERTAIN ONLY TO THE SPECIFIC SAMPLE(S) EVALUATED.

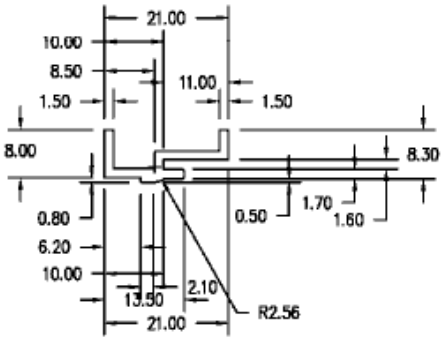

	REVISIONS	DATE

VEKA CANADA
4350 – 68 AVENUE
EDMONTON, ALBERTA
T6B 2P3 CANADA

NOTE: The copyright in this drawing is the property of VEKA CANADA and neither the drawing nor any part of it, nor any information contained therein, shall be reproduced or disclosed to any third party other than for the purpose of the use of the company product.

Part Number:	BX232
Description:	SASH SEAL
Dwg No./Dwn By:	BX232 / D.Fell
Date / Revision:	October 05/2001/03
Drawing Size:	SCALE 1:1

ALL REPORTS ARE THE CONFIDENTIAL PROPERTY OF CLIENTS. PUBLICATION OF STATEMENTS, CONCLUSIONS OR EXTRACTS FROM OR REGARDING OUR REPORTS IS NOT PERMITTED WITHOUT OUR WRITTEN APPROVAL. ANY LIABILITY ATTACHED THERETO IS LIMITED TO THE FEE CHARGED. THE RESULTS OF THIS EVALUATION REPORT PERTAIN ONLY TO THE SPECIFIC SAMPLE(S) EVALUATED.

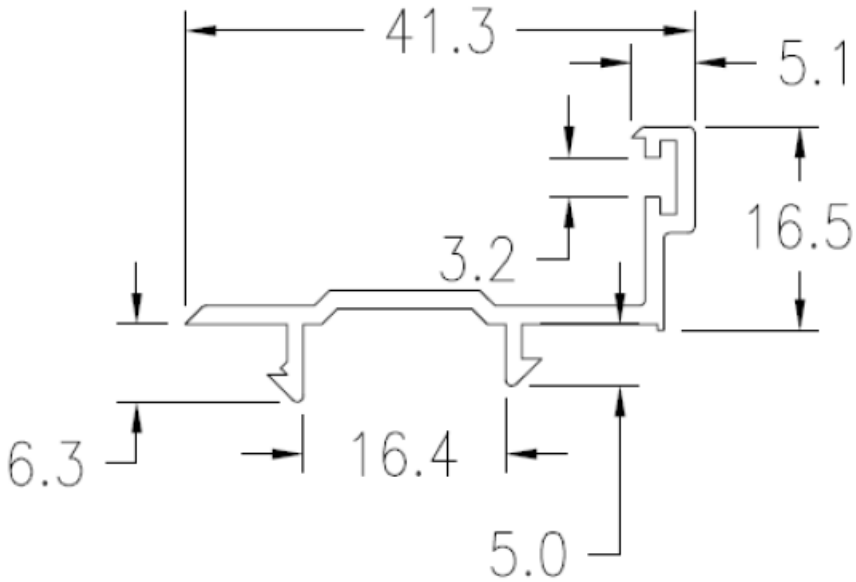

SCALE: 1:1

NOTE:
All fillets are 1.00mm radius unless otherwise dimensioned.

	REVISIONS	DATE

VEKA CANADA
4350 – 68 AVENUE
EDMONTON, ALBERTA
T6B 2P3 CANADA

NOTE: The copyright in this drawing is the property of VEKA CANADA and neither the drawing nor any part of it, nor any information contained therein, shall be reproduced or disclosed to any third party other than for the purpose of the use of the company product.

Part Number:	BX256
Description:	Sill Track
Dwg No./Dwn By:	BX256 / D.Feil
Date / Revision:	Oct 11/2001/03
Drawing Size:	Scale 2:1 Unless otherwise noted

ALL REPORTS ARE THE CONFIDENTIAL PROPERTY OF CLIENTS. PUBLICATION OF STATEMENTS, CONCLUSIONS OR EXTRACTS FROM OR REGARDING OUR REPORTS IS NOT PERMITTED WITHOUT OUR WRITTEN APPROVAL. ANY LIABILITY ATTACHED THERETO IS LIMITED TO THE FEE CHARGED. THE RESULTS OF THIS EVALUATION REPORT PERTAIN ONLY TO THE SPECIFIC SAMPLE(S) EVALUATED.

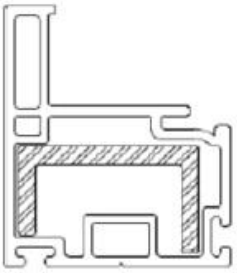

BX207 SASH

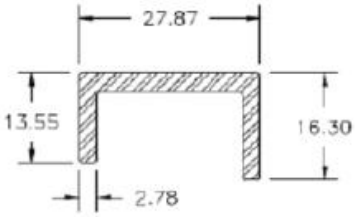

BX6207
12 GA REINFORCING

VEKA CANADA 4350 – 68 AVENUE EDMONTON, ALBERTA T6B 2P3 CANADA	NOTE: The copyright in this drawing is the property of Marlinx and neither the drawing nor any part of it, nor any information contained therein, shall be reproduced or disclosed to any third party other than for the purpose of the use of the company product.	Part Number: Description: Dwg No./Dwn By: Date / Revision: Drawing Size:	BX6207 REINFORCING FOR BX207 BX6207 November 23/2005/01 Scale: 1:1

ALL REPORTS ARE THE CONFIDENTIAL PROPERTY OF CLIENTS. PUBLICATION OF STATEMENTS, CONCLUSIONS OR EXTRACTS FROM OR REGARDING OUR REPORTS IS NOT PERMITTED WITHOUT OUR WRITTEN APPROVAL. ANY LIABILITY ATTACHED THERETO IS LIMITED TO THE FEE CHARGED. THE RESULTS OF THIS EVALUATION REPORT PERTAIN ONLY TO THE SPECIFIC SAMPLE(S) EVALUATED.

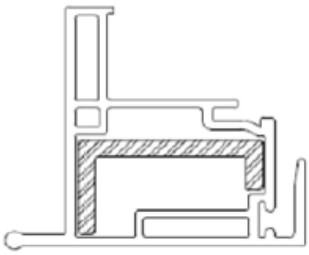

BX208/209 SASH w/ INTERLOCK & HANDLE

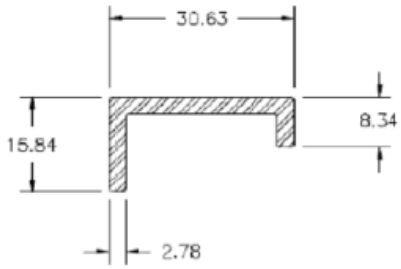

BX6208
12 GA REINFORCING

VEKA CANADA 4350 – 68 AVENUE EDMONTON, ALBERTA T6B 2P3 CANADA	NOTE: The copyright in this drawing is the property of Berlinex and neither the drawing nor any part of it, nor any information contained therein, shall be reproduced or disclosed to any third party other than for the purpose of the use of the company product.	Part Number: Description: Dwg No./Dwn By: Date / Revision: Drawing Size:	BX6208 REINFORCING FOR BX208/BX209 BX6208 November 23/2005/01 Scale: 1:1

ALL REPORTS ARE THE CONFIDENTIAL PROPERTY OF CLIENTS. PUBLICATION OF STATEMENTS, CONCLUSIONS OR EXTRACTS FROM OR REGARDING OUR REPORTS IS NOT PERMITTED WITHOUT OUR WRITTEN APPROVAL. ANY LIABILITY ATTACHED THERETO IS LIMITED TO THE FEE CHARGED. THE RESULTS OF THIS EVALUATION REPORT PERTAIN ONLY TO THE SPECIFIC SAMPLE(S) EVALUATED.

500 Series Picture Window Assembly

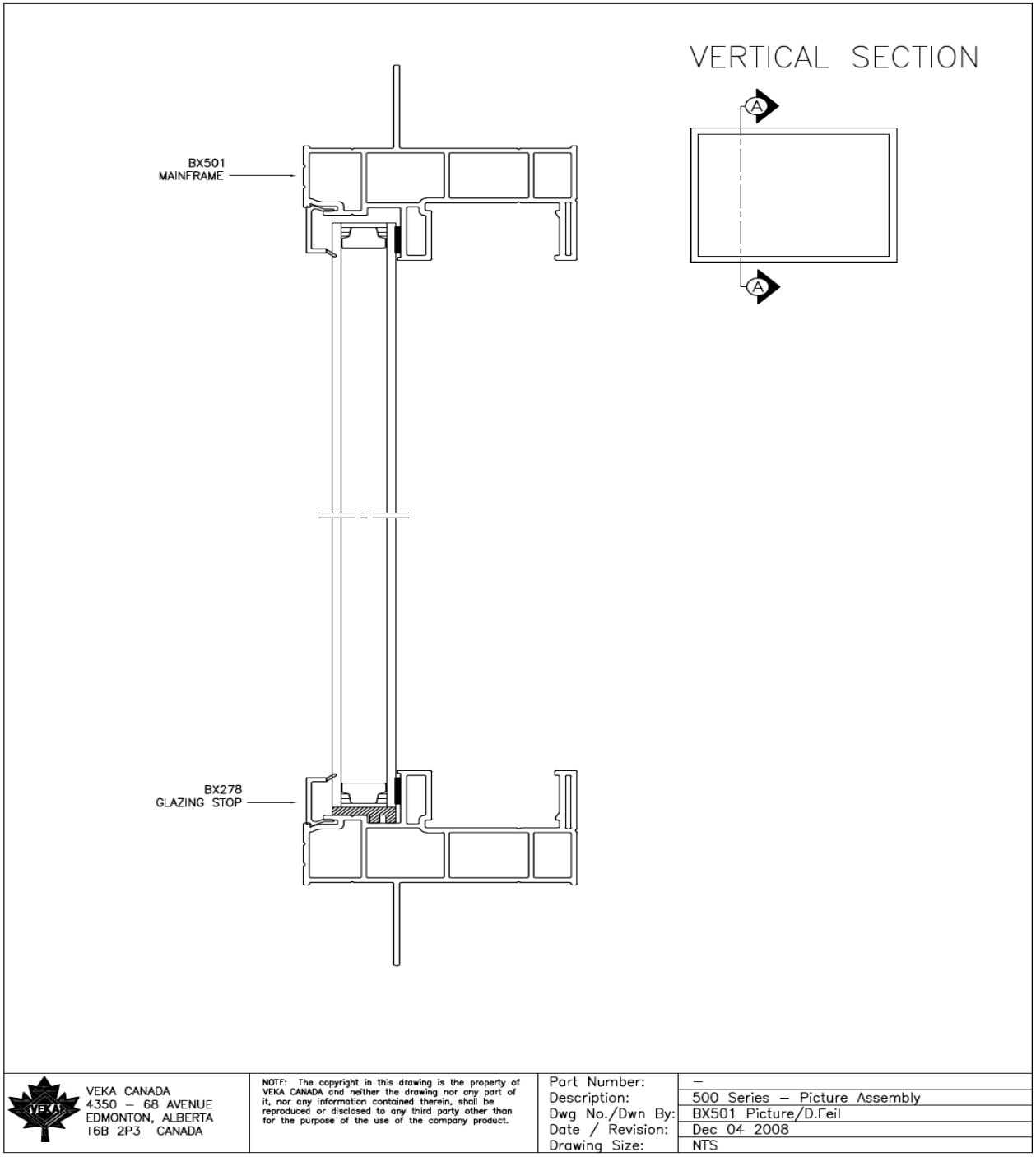

ALL REPORTS ARE THE CONFIDENTIAL PROPERTY OF CLIENTS. PUBLICATION OF STATEMENTS, CONCLUSIONS OR EXTRACTS FROM OR REGARDING OUR REPORTS IS NOT PERMITTED WITHOUT OUR WRITTEN APPROVAL. ANY LIABILITY ATTACHED THERETO IS LIMITED TO THE FEE CHARGED. THE RESULTS OF THIS EVALUATION REPORT PERTAIN ONLY TO THE SPECIFIC SAMPLE(S) EVALUATED.

500 Series Horizontal Slider Assembly

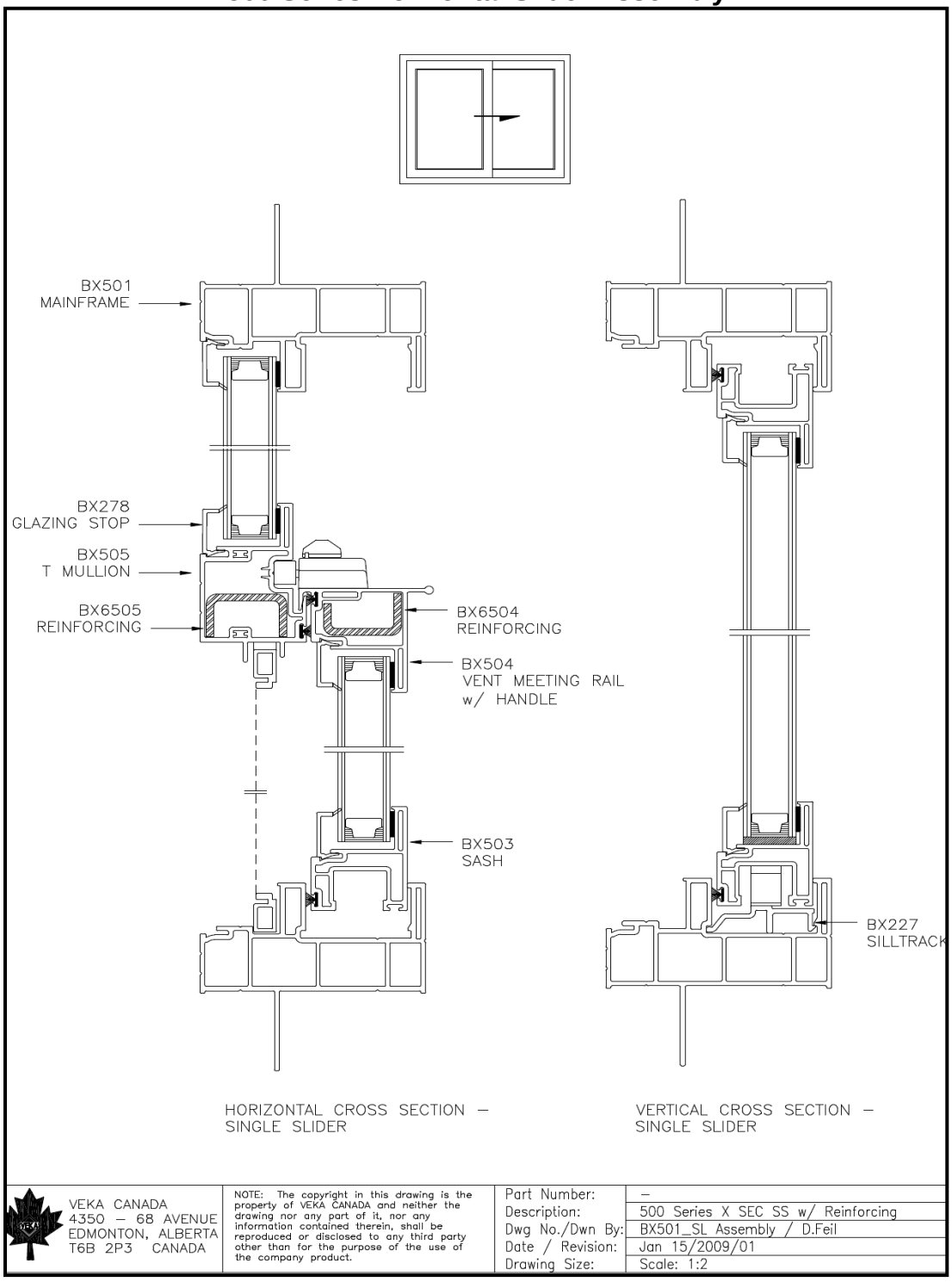

ALL REPORTS ARE THE CONFIDENTIAL PROPERTY OF CLIENTS. PUBLICATION OF STATEMENTS, CONCLUSIONS OR EXTRACTS FROM OR REGARDING OUR REPORTS IS NOT PERMITTED WITHOUT OUR WRITTEN APPROVAL. ANY LIABILITY ATTACHED THERETO IS LIMITED TO THE FEE CHARGED. THE RESULTS OF THIS EVALUATION REPORT PERTAIN ONLY TO THE SPECIFIC SAMPLE(S) EVALUATED.

500 Series Vertical Slider Assembly

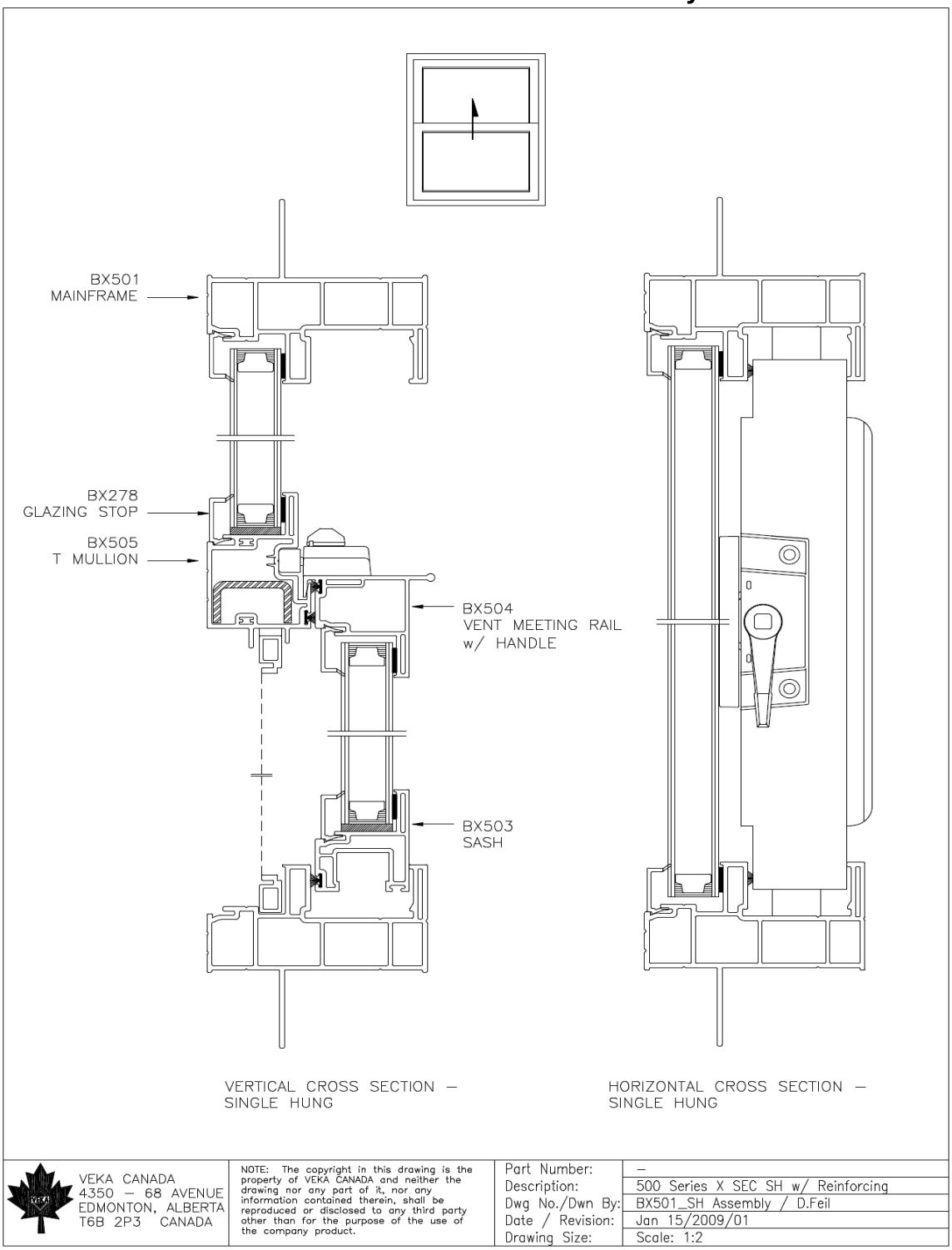

ALL REPORTS ARE THE CONFIDENTIAL PROPERTY OF CLIENTS. PUBLICATION OF STATEMENTS, CONCLUSIONS OR EXTRACTS FROM OR REGARDING OUR REPORTS IS NOT PERMITTED WITHOUT OUR WRITTEN APPROVAL. ANY LIABILITY ATTACHED THERETO IS LIMITED TO THE FEE CHARGED. THE RESULTS OF THIS EVALUATION REPORT PERTAIN ONLY TO THE SPECIFIC SAMPLE(S) EVALUATED.

500 Series Frame

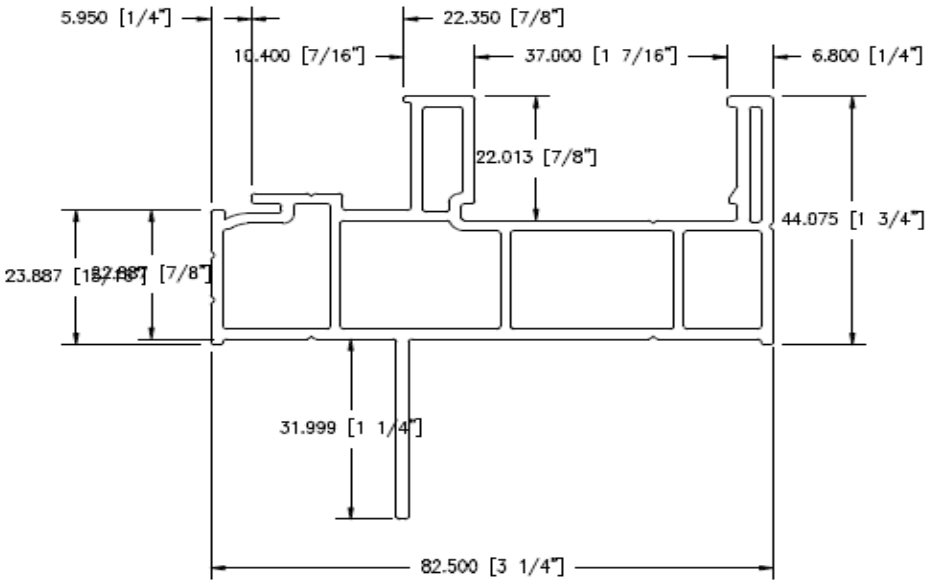

Ext. Wall Thks.:	1.8mm
Int. Wall Thks.:	1.5mm
Not Spec. Radii:	0.5mm
Overall Area:	699.701 mm²
Overall Weight:	1018.765 g/m [0.6846 lb/ft]
Rigid Weight:	–
Flex Weight:	–

VEKA CANADA
4350 – 68 AVENUE
EDMONTON, ALBERTA
T6B 2P3 CANADA

NOTE: The copyright in this drawing is the property of VEKA CANADA and neither the drawing nor any part of it, nor any information contained therein, shall be reproduced or disclosed to any third party other than for the purpose of the use of the company product.

Part Number:	BX501
Description:	3 1/4" MAINFRAME w/ FIN
Dwg No./Dwn By:	BX501
Date / Revision:	April 27/2005/ REVISION 3
Drawing Size:	Scale: 1:1

ALL REPORTS ARE THE CONFIDENTIAL PROPERTY OF CLIENTS. PUBLICATION OF STATEMENTS, CONCLUSIONS OR EXTRACTS FROM OR REGARDING OUR REPORTS IS NOT PERMITTED WITHOUT OUR WRITTEN APPROVAL. ANY LIABILITY ATTACHED THERETO IS LIMITED TO THE FEE CHARGED. THE RESULTS OF THIS EVALUATION REPORT PERTAIN ONLY TO THE SPECIFIC SAMPLE(S) EVALUATED.

500 Series Slider Sash

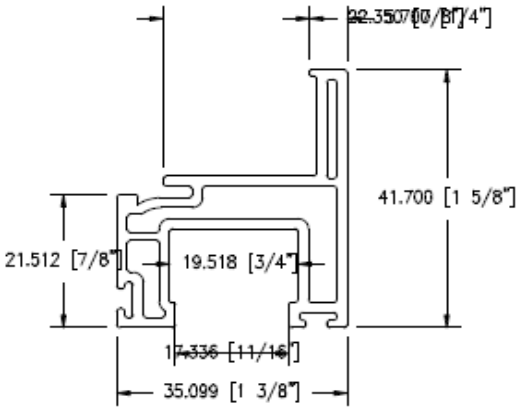

Ext. Wall Thks.:	1.6mm
Int. Wall Thks.:	1.2mm
Not Spec. Radii:	0.5mm
Overall Area:	318.977 mm²
Overall Weight:	464.431 g/m [0.3121 lb/ft]
Rigid Weight:	–
Flex Weight:	–

REVISIONS	DATE

VEKA CANADA
4350 – 68 AVENUE
EDMONTON, ALBERTA
T6B 2P3 CANADA

NOTE: The copyright in this drawing is the property of VEKA CANADA and neither the drawing nor any part of it, nor any information contained therein, shall be reproduced or disclosed to any third party other than for the purpose of the use of the company product.

Part Number:	BX503
Description:	SASH
Dwg No./Dwn By:	BX503
Date / Revision:	April 27/2005/REVISION 2
Drawing Size:	Scale: 1:1

ALL REPORTS ARE THE CONFIDENTIAL PROPERTY OF CLIENTS. PUBLICATION OF STATEMENTS, CONCLUSIONS OR EXTRACTS FROM OR REGARDING OUR REPORTS IS NOT PERMITTED WITHOUT OUR WRITTEN APPROVAL. ANY LIABILITY ATTACHED THERETO IS LIMITED TO THE FEE CHARGED. THE RESULTS OF THIS EVALUATION REPORT PERTAIN ONLY TO THE SPECIFIC SAMPLE(S) EVALUATED.

500 Series Slider Sash Interlock

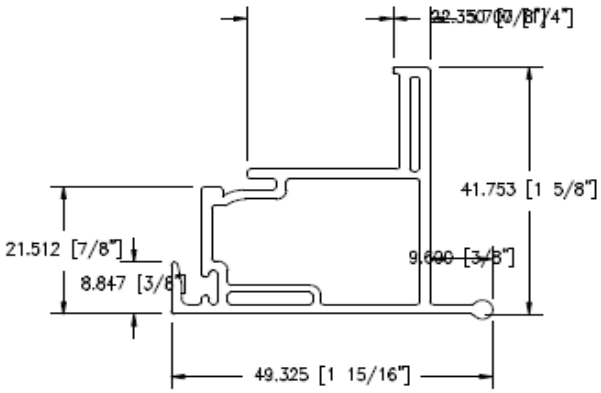

Ext. Wall Thks.:	1.6mm			
Int. Wall Thks.:	1.2mm			
Not Spec. Radii:	0.5mm			
Overall Area:	311.045 mm²			
Overall Weight:	452.882 g/m [0.3043 lb/ft]			
Rigid Weight:	–			
Flex Weight:	–		REVISIONS	DATE

VEKA CANADA
4350 – 68 AVENUE
EDMONTON, ALBERTA
T6B 2P3 CANADA

NOTE: The copyright in this drawing is the property of VEKA CANADA and neither the drawing nor any part of it, nor any information contained therein, shall be reproduced or disclosed to any third party other than for the purpose of the use of the company product.

Part Number:	BX504
Description:	SASH w/ INTERLOCK & HANDLE
Dwg No./Dwn By:	BX504
Date / Revision:	April 27/2005/REVISION 2
Drawing Size:	Scale: 1:1

ALL REPORTS ARE THE CONFIDENTIAL PROPERTY OF CLIENTS. PUBLICATION OF STATEMENTS, CONCLUSIONS OR EXTRACTS FROM OR REGARDING OUR REPORTS IS NOT PERMITTED WITHOUT OUR WRITTEN APPROVAL. ANY LIABILITY ATTACHED THERETO IS LIMITED TO THE FEE CHARGED. THE RESULTS OF THIS EVALUATION REPORT PERTAIN ONLY TO THE SPECIFIC SAMPLE(S) EVALUATED.

500 Series Sash Interlock Reinforcement

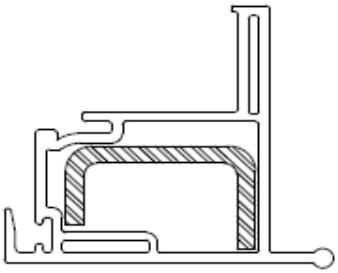

BX504 SASH w/ INTERLOCK & HANDLE

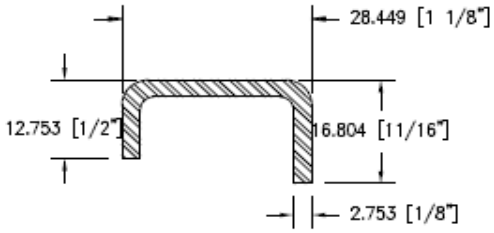

BX6504
12 GA REINFORCING

Ext. Wall Thks.:	–			
Int. Wall Thks.:	–			
Not Spec. Radii:	–			
Overall Area:	–			
Overall Weight:	–			
Rigid Weight:	–			
Flex Weight:	–		REVISIONS	DATE

VEKA CANADA
4350 – 68 AVENUE
EDMONTON, ALBERTA
T6B 2P3 CANADA

NOTE: The copyright in this drawing is the property of Bartlinex and neither the drawing nor any part of it, nor any information contained therein, shall be reproduced or disclosed to any third party other than for the purpose of the use of the company product.

Part Number:	BX6504
Description:	REINFORCING FOR BX504
Dwg No./Dwn By:	BX6504
Date / Revision:	Oct 3/2005/REV 1
Drawing Size:	Scale: 1:1

ALL REPORTS ARE THE CONFIDENTIAL PROPERTY OF CLIENTS. PUBLICATION OF STATEMENTS, CONCLUSIONS OR EXTRACTS FROM OR REGARDING OUR REPORTS IS NOT PERMITTED WITHOUT OUR WRITTEN APPROVAL. ANY LIABILITY ATTACHED THERETO IS LIMITED TO THE FEE CHARGED. THE RESULTS OF THIS EVALUATION REPORT PERTAIN ONLY TO THE SPECIFIC SAMPLE(S) EVALUATED.

500 Series Slider Mullion

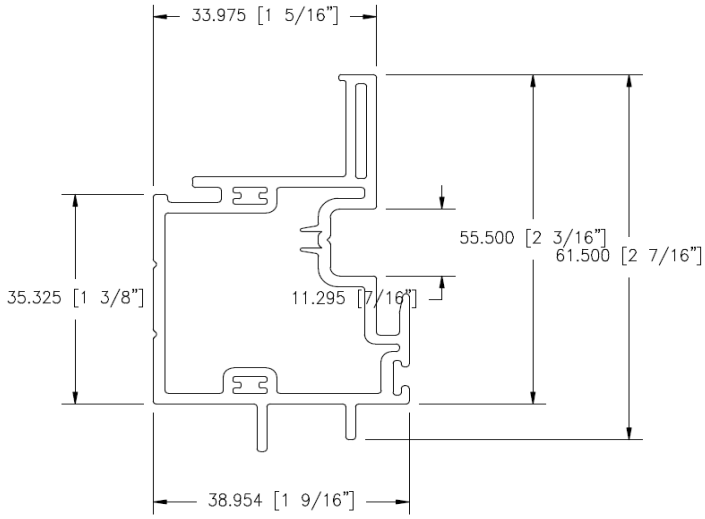

Ext. Wall Thks.:	1.8mm			
Int. Wall Thks.:	1.5mm			
Not Spec. Radii:	0.5mm			
Overall Area:	427.906 mm²	02	Widened screen channel by 2.0mm	Nov 25 08
Overall Weight:	623.031 g/m [0.4187 lb/ft]	01	Lengthened screen retaining leg by 2.0mm	Nov 25 08
Rigid Weight:	–		REVISIONS	DATE
Flex Weight:	–			

VEKA CANADA
4350 – 68 AVENUE
EDMONTON, ALBERTA
T6B 2P3 CANADA

NOTE: The copyright in this drawing is the property of VEKA CANADA and neither the drawing nor any part of it, nor any information contained therein, shall be reproduced or disclosed to any third party other than for the purpose of the use of the company product.

Part Number:	BX505
Description:	T MULLION X0
Dwg No./Dwn By:	BX505_rev1 / D.Feil
Date / Revision:	Nov 25/2008
Drawing Size:	Scale: 1:1

ALL REPORTS ARE THE CONFIDENTIAL PROPERTY OF CLIENTS. PUBLICATION OF STATEMENTS, CONCLUSIONS OR EXTRACTS FROM OR REGARDING OUR REPORTS IS NOT PERMITTED WITHOUT OUR WRITTEN APPROVAL. ANY LIABILITY ATTACHED THERETO IS LIMITED TO THE FEE CHARGED. THE RESULTS OF THIS EVALUATION REPORT PERTAIN ONLY TO THE SPECIFIC SAMPLE(S) EVALUATED.

500 Series Slider Mullion Reinforcement

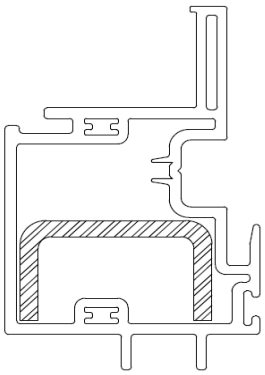

BX505 T MULLION XO

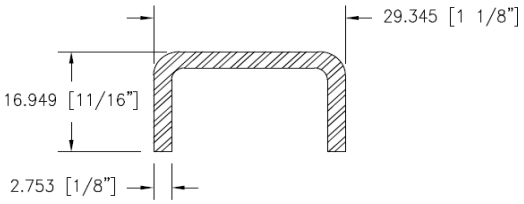

BX6505
12 GA REINFORCING

VEKA CANADA 4350 – 68 AVENUE EDMONTON, ALBERTA T6B 2P3 CANADA	NOTE: The copyright in this drawing is the property of Berlinex and neither the drawing nor any part of it, nor any information contained therein, shall be reproduced or disclosed to any third party other than for the purpose of the use of the company product.	Part Number:	BX6505
		Description:	REINFORCING FOR BX505
		Dwg No./Dwn By:	BX6505
		Date / Revision:	Oct 3/2005/REV 1
		Drawing Size:	Scale: 1:1

ALL REPORTS ARE THE CONFIDENTIAL PROPERTY OF CLIENTS. PUBLICATION OF STATEMENTS, CONCLUSIONS OR EXTRACTS FROM OR REGARDING OUR REPORTS IS NOT PERMITTED WITHOUT OUR WRITTEN APPROVAL. ANY LIABILITY ATTACHED THERETO IS LIMITED TO THE FEE CHARGED. THE RESULTS OF THIS EVALUATION REPORT PERTAIN ONLY TO THE SPECIFIC SAMPLE(S) EVALUATED.

500 Series Horizontal Slider Sill Track

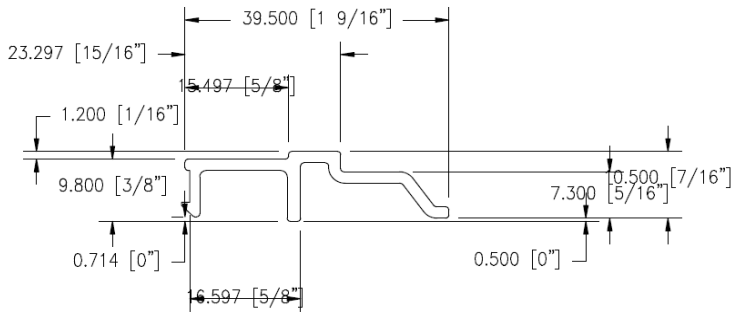

Ext. Wall Thks.:	1.8 mm
Int. Wall Thks.:	–
Not Spec. Radii:	0.50 mm
Overall Area:	110.41 mm²
Overall Weight:	160.758 g/m (.1080 lb/ft)
Rigid Weight:	–
Flex Weight:	–

REVISIONS	DATE

VEKA CANADA
4350 – 68 AVENUE
EDMONTON, ALBERTA
T6B 2P3 CANADA

NOTE: The copyright in this drawing is the property of VEKA CANADA and neither the drawing nor any part of it, nor any information contained therein, shall be reproduced or disclosed to any third party other than for the purpose of the use of the company product.

Part Number:	BX227
Description:	SILLTRACK
Dwg No./Dwn By:	BX227 / D.Feil
Date / Revision:	October 10/2001/02
Drawing Size:	SCALE 1:1

ALL REPORTS ARE THE CONFIDENTIAL PROPERTY OF CLIENTS. PUBLICATION OF STATEMENTS, CONCLUSIONS OR EXTRACTS FROM OR REGARDING OUR REPORTS IS NOT PERMITTED WITHOUT OUR WRITTEN APPROVAL. ANY LIABILITY ATTACHED THERETO IS LIMITED TO THE FEE CHARGED. THE RESULTS OF THIS EVALUATION REPORT PERTAIN ONLY TO THE SPECIFIC SAMPLE(S) EVALUATED.

500 Series Glazing Bead

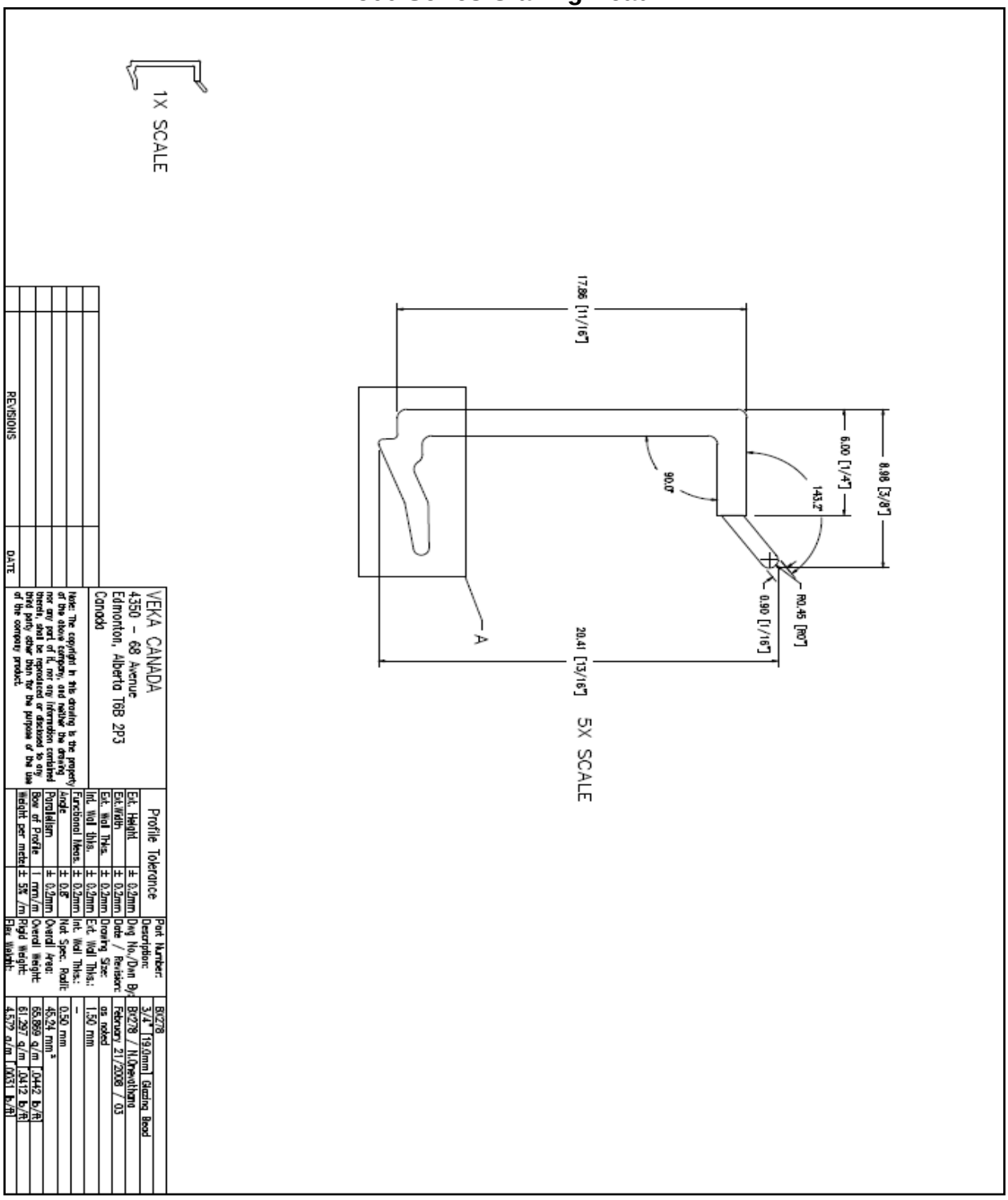

ALL REPORTS ARE THE CONFIDENTIAL PROPERTY OF CLIENTS. PUBLICATION OF STATEMENTS, CONCLUSIONS OR EXTRACTS FROM OR REGARDING OUR REPORTS IS NOT PERMITTED WITHOUT OUR WRITTEN APPROVAL. ANY LIABILITY ATTACHED THERETO IS LIMITED TO THE FEE CHARGED. THE RESULTS OF THIS EVALUATION REPORT PERTAIN ONLY TO THE SPECIFIC SAMPLE(S) EVALUATED.

Duralite™ Thermal Model Information Rev 1.3 December 17, 2010 for Duralite™ design model Rev 1.02

Table B: Dimensions in inches for airspaces 23/48" (0.479") and larger. Use with *DS.dxf*.

Gap	Code	N	BH	TL	SAW	SAH	ST	SH	AC1	AC2	AC3	AC4	AL1 AL 2	SAF	IF 1	IF 2	IF 3	F
No. of rectangles		2	2	1	1	2	1	1	1	1	1	1	2	2	2	2	2	2
23/48	48H			0.479	0.435		0.400	0.423	0.363	0.397	0.397	0.339	0.427					
1/2	50H			0.500	0.456		0.421	0.444	0.384	0.418	0.418	0.360	0.448					
25/48	52H			0.521	0.477		0.442	0.465	0.405	0.439	0.439	0.381	0.469					
26/48	54H			0.542	0.498		0.463	0.486	0.426	0.460	0.460	0.402	0.490					
9/16	56H			0.563	0.519		0.484	0.507	0.447	0.481	0.481	0.423	0.511					
28/48	58H			0.583	0.539		0.504	0.527	0.467	0.501	0.501	0.443	0.531					
29/48	60H			0.604	0.560		0.525	0.548	0.488	0.522	0.522	0.464	0.552					
5/8	62H			0.625	0.581		0.546	0.569	0.509	0.543	0.543	0.485	0.573					
31/48	64H			0.646	0.602		0.567	0.590	0.530	0.564	0.564	0.506	0.594					
32/48	66H			0.667	0.623		0.588	0.611	0.551	0.585	0.585	0.527	0.615					
11/16	68H			0.688	0.644		0.609	0.632	0.572	0.606	0.606	0.548	0.636					
34/48	70H			0.709	0.665		0.63	0.653	0.593	0.627	0.627	0.569	0.657					
35/48	73H			0.729	0.685		0.65	0.673	0.613	0.647	0.647	0.589	0.677					
3/4	75H			0.75	0.706		0.671	0.694	0.634	0.668	0.668	0.610	0.698					
37/48	77H			0.77	0.726		0.691	0.714	0.654	0.688	0.688	0.630	0.718					
38/48	79H			0.792	0.748		0.713	0.736	0.676	0.710	0.710	0.652	0.740					
13/16	81H	**0.058**	**0.070**	0.813	0.769	**0.004**	0.734	0.757	0.697	0.731	0.731	0.673	0.761	**0.014**	**0.015**	**0.015**	**0.002**	**0.022**
Fixed for all		**x 0.022**	**x 0.007**	**x 0.048**	**x 0.004**	**x 0.209**	**x 0.018**	**x 0.023**	**x 0.022**	**x 0.064**	**x 0.074**	**x 0.007**	**x 0.015**	**x 0.018**	**x 0.064**	**x 0.074**	**x 0.023**	**x 0.213**

Notes to Tables A, B, C & D:

1. Dimensions in **bold** are constant for all gap sizes in the column.
2. Use this dimension to complete the rectangle in boxes that show only one dimension.
3. In boxes with two numbers shown, the upper number is in the airspace dimension; the lower number is parallel to the glass.
4. 25H and 27H use the same spacer assembly – the difference in spacer width is created by using less bondline adhesive (Dimension F).
5. If you have any questions about this chart please send email to Douglas Hauck, Truseal Technologies, Inc. hauck@truseal.com

Duralite™ is a trademark of Truseal Technologies, Inc.

ALL REPORTS ARE THE CONFIDENTIAL PROPERTY OF CLIENTS. PUBLICATION OF STATEMENTS, CONCLUSIONS OR EXTRACTS FROM OR REGARDING OUR REPORTS IS NOT PERMITTED WITHOUT OUR WRITTEN APPROVAL. ANY LIABILITY ATTACHED THERETO IS LIMITED TO THE FEE CHARGED. THE RESULTS OF THIS EVALUATION REPORT PERTAIN ONLY TO THE SPECIFIC SAMPLE(S) EVALUATED.

Duralite™ Thermal Model Information Rev 1.3 December 17, 2010

Legend

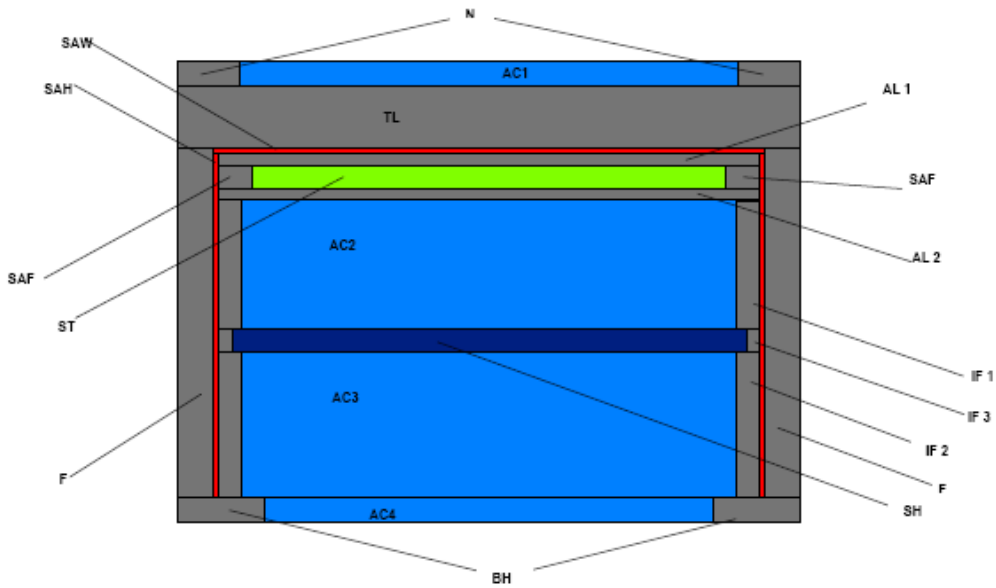

	Description	Material and Conductivity Imp	SI
N	71X	Butyl 1.603 Btu in/hr ft^2 °F	0.231 W/m/°C
BH	71X	Butyl 1.603 Btu in/hr ft^2 °F	0.231 W/m/°C
TL	71X	Butyl 1.603 Btu in/hr ft^2 °F	0.231 W/m/°C
SAW	Moisture vapour barrier	Default polyethylene	Default polyethylene
SAH	Moisture vapour barrier	Default polyethylene	Default polyethylene
ST	Stiffener	Default polypropylene	Default polypropylene
SH	Shim	Default polycarbonate	Default polycarbonate
AL 1 2	Adhesive	Butyl 1.603 Btu in/hr ft^2 °F	0.231 W/m/°C
AC 2	still air	still air – default conductivity	default still air
AC 1 3 4	link to respective adjacent air cavities		
SAF	Adhesive	Butyl 1.603 Btu in/hr ft^2 °F	0.231 W/m/°C
IF 1 2 3	Adhesive	Butyl 1.603 Btu in/hr ft^2 °F	0.231 W/m/°C
F	Adhesive	Butyl 1.603 Btu in/hr ft^2 °F	0.231 W/m/°C

If there are questions regarding this document please contact

Douglas Hauck
Technical Service
Truseal Technologies, Inc.
216-910-2886
440-497-7064 mobile
hauck@truseal.com

Duralite™ is a trademark of Truseal Technologies, Inc.

ALL REPORTS ARE THE CONFIDENTIAL PROPERTY OF CLIENTS. PUBLICATION OF STATEMENTS, CONCLUSIONS OR EXTRACTS FROM OR REGARDING OUR REPORTS IS NOT PERMITTED WITHOUT OUR WRITTEN APPROVAL. ANY LIABILITY ATTACHED THERETO IS LIMITED TO THE FEE CHARGED. THE RESULTS OF THIS EVALUATION REPORT PERTAIN ONLY TO THE SPECIFIC SAMPLE(S) EVALUATED.

GED Integrated Solutions

intercept SPACER SYSTEM

Product Information

Intercept® ULTRA Intercept Thinplate Simulation Model

For More Information, Please Contact Your GED Sales Manager

GED Integrated Solutions
9280 Dutton Drive
Twinsburg, OH 44087-1967

Phone: 330-963-5401
Fax: 330-425-8741
www.gedusa.com

For THERM

- ✓ ULTRA and Thinplate spacer wall thickness = 0.195mm
- ✓ Thermal conductivity

  ULTRA or ULTRA ***Blackline*** = 13.63 W/m·K

  Thinplate or Thinplate ***Blackline*** = 50 W/m·K

  Desiccant = 0.29 w/m·K

  Sealant = 0.24 W/m·K
- ✓ Spacer should be below sash line

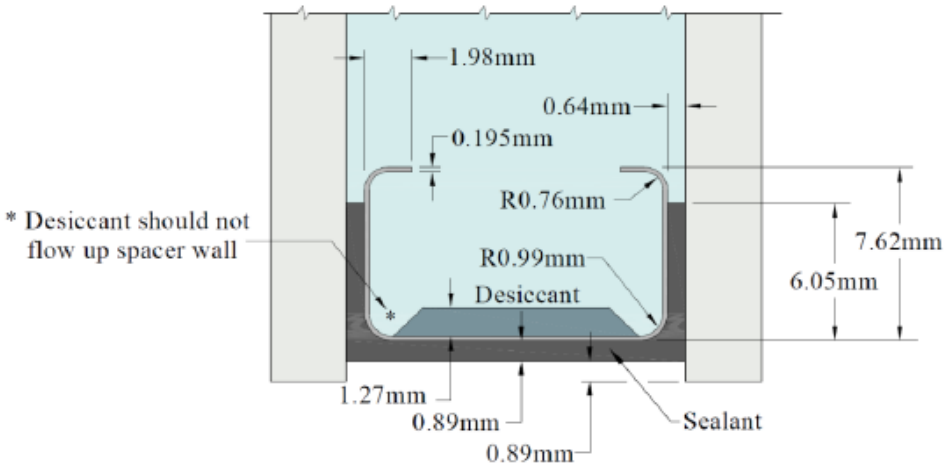

PI Sheet Ultra Thinplate Metric Simulation Model
01/04/13

ALL REPORTS ARE THE CONFIDENTIAL PROPERTY OF CLIENTS. PUBLICATION OF STATEMENTS, CONCLUSIONS OR EXTRACTS FROM OR REGARDING OUR REPORTS IS NOT PERMITTED WITHOUT OUR WRITTEN APPROVAL. ANY LIABILITY ATTACHED THERETO IS LIMITED TO THE FEE CHARGED. THE RESULTS OF THIS EVALUATION REPORT PERTAIN ONLY TO THE SPECIFIC SAMPLE(S) EVALUATED.

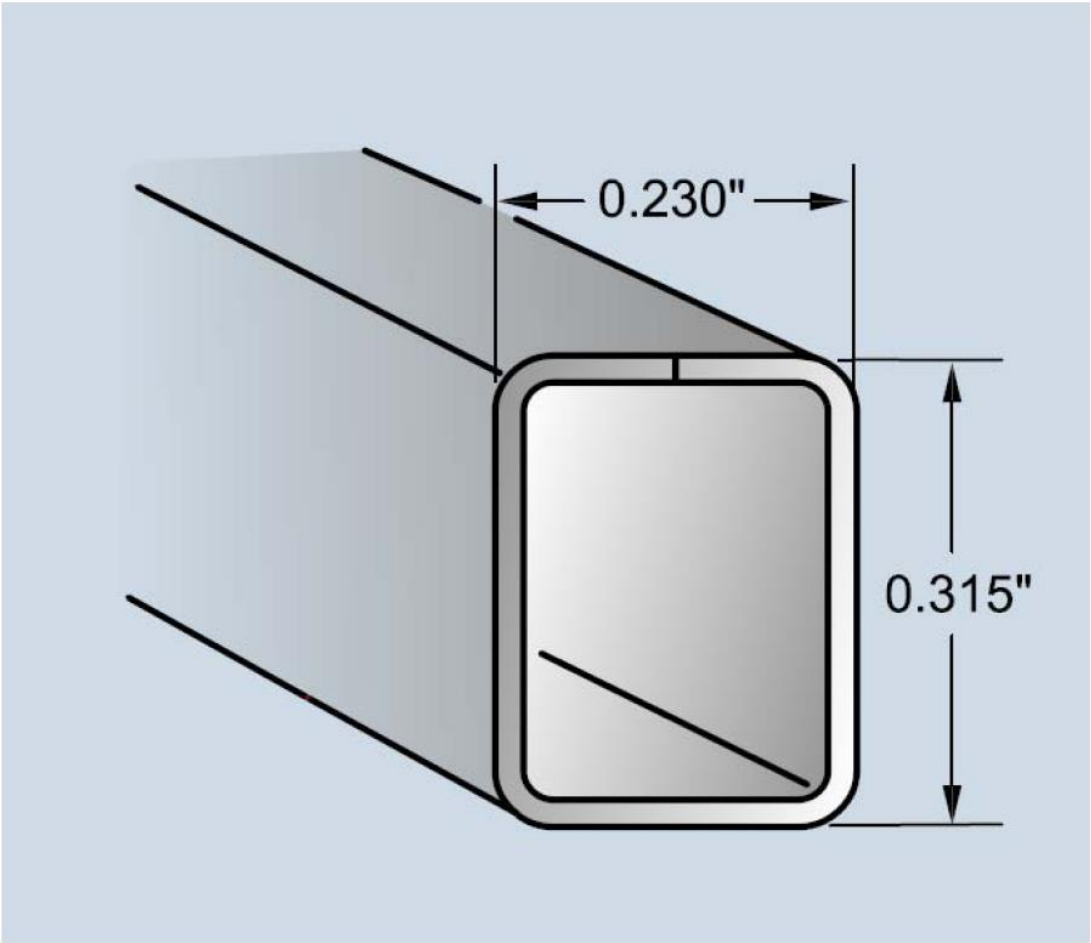

***NOTE – Aluminum grille is 0.017" thickness**

ALL REPORTS ARE THE CONFIDENTIAL PROPERTY OF CLIENTS. PUBLICATION OF STATEMENTS, CONCLUSIONS OR EXTRACTS FROM OR REGARDING OUR REPORTS IS NOT PERMITTED WITHOUT OUR WRITTEN APPROVAL. ANY LIABILITY ATTACHED THERETO IS LIMITED TO THE FEE CHARGED. THE RESULTS OF THIS EVALUATION REPORT PERTAIN ONLY TO THE SPECIFIC SAMPLE(S) EVALUATED.

VANCOUVER, BC: 877.461.8378 ph. | 604.527.8368 fx.
LOS ANGELES, CA: 909.483.0250 ph. | 909.483.0336 fx.
TULSA, OK: 918.437.8333 ph. | 918.437.8487 fx.
TORONTO, ON 416.550.9280
SEATTLE, WA 425.512.8419
WEBSITE: WWW.QAI.ORG

Incoming Raw Materials QC Form

Incoming raw materials are to be checked in accordance with the below Quality Check Form. This form must be filled out for every shipment of incoming raw material.

PVC Extrusion			**Glazing Tape**			**Metal Reinforcement**		
Dimensional Check Against Drawings	Visual Inspection for Damage to Extrusion		Visual Inspection for Rips or Tears	Meets Required Dimensions		Visual Inspection for Extensive Corrosion	Confirmation of Correct Metal Grade	
Date	**Technicians Initials**	**Shipment Number**	**Date**	**Technicians Initials**	**Shipment Number**	**Date**	**Technicians Initials**	**Shipment Number**

ALL REPORTS ARE THE CONFIDENTIAL PROPERTY OF CLIENTS. PUBLICATION OF STATEMENTS, CONCLUSIONS OR EXTRACTS FROM OR REGARDING OUR REPORTS IS NOT PERMITTED WITHOUT OUR WRITTEN APPROVAL. ANY LIABILITY ATTACHED THERETO IS LIMITED TO THE FEE CHARGED. THE RESULTS OF THIS EVALUATION REPORT PERTAIN ONLY TO THE SPECIFIC SAMPLE(S) EVALUATED.

WINDOW INSPECTION CHECKLIST

1	**General Info**			
	Window Product Model Code			
	Date of Manufacture			
	Inspectors Name			
	REQUIREMENTS	**YES**	**NO**	**COMMENT**
2	**Cutting / Welding**			
	Frame and Sash dimensions are within tolerance			
	Welds are solid all the way through			
	Corners cleaned for proper fit and appearance			
3	**Drainage**			
	Drain holes are the correct size and located in the correct position (as stipulated in the QAI evaluation report)			
	Water passages are clean and free from debris			
4	**Hardware**			
	Correct hardware is installed			
	Correct number and size of fasteners are used			
	Hardware is installed in the correct location. Locks align and engage with keepers.			
5	**Insulated Glass Units**			
	Spacer bar filled with correct level of desiccant			
	Low-E coating placed on correct surface			
	Spacer bar centered between glass lites			
	Correct type of sealant used. Sealant applied in accordance with their IGMAC listing.			
	IGU allowed to cool for correct length of time			
	Gas fill added (where applicable)			
	Gas fill equipment has been verified to be in good working order. Sensors are in calibration.			
	Gas fill pin-hole is sealed with correct silicone sealant (in accordance with IGMAC listing)			
6	**Glazing**			
	Correct type of glazing tape used			
	Silicone is placed at corners of glazing tape			
7	**Storage and Packaging**			
	Windows are stored in a vertical position and placed in an area where they are protected from damage			
	Windows are correctly labeled in accordance with QAI and ENERGY STAR requirements			
	Windows are packaged to sufficiently protect them from damage during transportation			

ALL REPORTS ARE THE CONFIDENTIAL PROPERTY OF CLIENTS. PUBLICATION OF STATEMENTS, CONCLUSIONS OR EXTRACTS FROM OR REGARDING OUR REPORTS IS NOT PERMITTED WITHOUT OUR WRITTEN APPROVAL. ANY LIABILITY ATTACHED THERETO IS LIMITED TO THE FEE CHARGED. THE RESULTS OF THIS EVALUATION REPORT PERTAIN ONLY TO THE SPECIFIC SAMPLE(S) EVALUATED.

Manufacturing Record

Date	Purchase Order	Product Model Code	Dimensional Check Against Drawings and PO	Visual Inspection for Damage to Window	Operability Check for Operable Windows	Window is Labeled with Correct Permanent and Temporary Label

ALL REPORTS ARE THE CONFIDENTIAL PROPERTY OF CLIENTS. PUBLICATION OF STATEMENTS, CONCLUSIONS OR EXTRACTS FROM OR REGARDING OUR REPORTS IS NOT PERMITTED WITHOUT OUR WRITTEN APPROVAL. ANY LIABILITY ATTACHED THERETO IS LIMITED TO THE FEE CHARGED. THE RESULTS OF THIS EVALUATION REPORT PERTAIN ONLY TO THE SPECIFIC SAMPLE(S) EVALUATED.