QAI LABORATORIES
CERTIFICATION TESTING INSPECTION

8385 White Oak Avenue
Rancho Cucamonga, CA 91730
909.483.0250 ph. | 909.483.0336 fx.

# THIRD-PARTY
# FACTORY INSPECTION PROCEDURE MANUAL

File No. B1173 FIP Rev1

PRODUCT
TRADENAMES
**MGV (Multi-Guard Vent) Gable Louver Vent and MGV Eave/Foundation/Soffit Vents**

Written for:

**Able Sheet Metal**
614 N Ford Blvd.
Los Angeles, CA 90022

## TABLE OF CONTENTS

1. GENERAL PRODUCT AND LISTING INFORMATION ..... 3
2. Signature Page ..... 5
2.1. Scope ..... 5
2.2. Signatures of Listee, Manufacturer, Inspection Agency ..... 5
3. Manufacturing Facilities – General Contact Information ..... 6
4. Manual Revisions ..... 6
5. Product Identification & Labeling ..... 6
6. Traceability ..... 6
7. Work Flow, Manufacturing Process Description ..... 7
8. Product or Production Changes ..... 7
9. Organization and Personnel Information ..... 8
9.1. Quality Control Personnel Job Descriptions ..... 8
9.2. Qualifications and Training ..... 8
10. Product Packaging, Storage and Shipment ..... 8
11. Complaints, Corrective Action and Preventative Action ..... 8
11.1. Recall of Nonconforming Products ..... 9
12. Incoming Materials ..... 9
12.1. Incoming Materials Specifications ..... 9
12.2. Incoming Material Acceptance and Testing ..... 9
12.3. Formulation or Assembly Specification ..... 10
13. Final Product Inspection and Quality Control Tests ..... 10
13.1. In-house Quality Control Tests ..... 10
13.2. Finished Product Specifications ..... 10
14. Nonconforming Material ..... 10
15. Measuring and Test Equipment, Calibrations ..... 10
16. QC Forms, Document Approval, Records ..... 11
17. Manufacturing Declarations ..... 11
APPENDIX A – MGV Soffit and Louver Dimensional Drawings
APPENDIX B – Material Cert Examples
RECORD OF REVISIONS

# 1. GENERAL PRODUCT AND LISTING INFORMATION

Product(s): MGV (Multi-Guard Vent) Gable Louver Vent and MGV Eave/Foundation/Soffit Vents

Approved Products

| Model Number | Flange, Size, inches | Body Size (width x length), inches | Model Number | Flange, Size, inches | Body Size (width x length), inches |
|---|---|---|---|---|---|
| **Soffit Vents** | | | | | |
| 4500-MGV16 | 1 | 3 x 14 | 4780-MGV16 | 1 | 6 x 14 |
| 4620-MGV16 | 1 | 3 x 22 | 4740-MGV16 | 1 | 6 x 22 |
| 4960-MGV16 | 1 | 3 x 60 | 4980-MGV16 | 1 | 6 x 60 |
| 4963-MGV16 | 1 | 3 x 60 for balcony inspections | 4870-MGV16 | 1 | 6 x 72 |
| 4860-MGV16 | 1 | 3 x 72 | 4875-MGV16 | 1 | 6 x 120 |
| 4965-MGV16 | 1 | 3 x 120 | 4440-MGV16 | 1 | 12 x 12 |
| 4970-MGV16 | 1 | 4 x 60 | | | |
| 4865-MGV16 | 1 | 4 x 72 | | | |
| 4890-MGV16 | 1 | 4 x 120 | | | |
| **Louver Vents** | | | | | |
| 5420-1206-MGV16 | 1 | 12 x 6 | 5420-1208-MGV16 | 1 | 12 x 8 |
| 5420-1212-MGV16 | 1 | 12 x 12 | 5420-1224-MGV16 | 1 | 12 x 24 |
| 5320-MGV16 | 1 | 14 x 12 | 5420-1414-MGV16 | 1 | 14 x 14 |
| 5420-1416-MGV16 | 1 | 14 x 16 | 5340-MGV16 | 1 | 14 x 18 |
| 5360-MGV16 | 1 | 14 x 24 | 5420-1616-MGV16 | 1 | 16 x 16 |
| 5420-1624-MGV16 | 1 | 16 x 24 | 5405-1818-MGV16 | 1 | 18 x 18 |
| 5410-MGV16 | 1 | 18 x 24 | | | |

| | |
|---|---|
| Product Description: | Attic and Soffit vents manufactured out of galvanized steel with the addition of intumescent strips working in conjunction with the vent design to resist ember and flame penetration. |
| Applicable Requirements: | ASTM E2886 and ASTM E2912, ICC-ES AC10 |
| Primary Listee: | Able Sheet Metal<br>614 N. Ford Blvd.,<br>Los Angeles, CA, 90022<br><br>Contact Person: Gurgen Tovmasyan<br>Phone: 1-800-699-2253<br>Fax:<br>Email: ablemetal@yahoo.com |
| Manufacturing Locations: | Able Sheet Metal<br>14111 Catalina Street<br>San Leandro, CA<br>QC Contact Person: Jess Grandy<br>Phone: 480-640-0458<br>Email: jess@ablemetal.com<br><br>Able Sheet Metal<br>4532 Floral Drive.,<br>Los Angeles, CA, 90022<br>Contact Person: Gurgen Tovmasyan<br>Phone: 1-800-699-2253<br>Email: ablemetal@yahoo.com |
| For use with applications to the following Approval Bodies: | QAI, ICC-Evaluation Service |
| Third Party Inspection Agency: | QAI Laboratories (AA-723) for USA<br>QAI Laboratories (AA-635) for Canada<br><br>Contact Person: Jason Friedrich<br>Phone: (909) 483-0250<br>Fax: (909) 483-0336<br>Email: jfriedrich@qai.org |

# 2. Signature Page

## *2.1. Scope*

This manual defines the Third-Party Inspection process and details of the plant Quality Management System to ensure that products manufactured at this facility will meet or exceed the product quality level prescribed by the applicable codes and standards referenced in this manual. The specifications herein ensure consistency and quality of the listed product(s) by setting: manufacturing process, testing procedures, sampling methodology, testing frequency, equipment maintenance and calibration, qualifications of personnel, labeling and traceability, records keeping practices, and all other pertinent details.

## *2.2. Signatures of Listee, Manufacturer, Inspection Agency*

The Signatories to this document are making a formal declaration of the commitment to quality policies, and to take responsibility for the legitimacy of this document in both manufacturing and third-party inspection according the procedures and specifications included.

**Authorized Representative of Listee: Able Sheet Metal**

| | |
|---|---|
| Michael Tovmasyan | April 29, 2026 |
| NAME PRINTED | DATE |
| | Special Projects Manager |
| NAME SIGNATURE | TITLE |

**Prepared and Approved by QAI**

| | |
|---|---|
| Jackie Zhou | September 2, 2026 |
| NAME PRINTED | DATE |
| | Project Specialist |
| NAME SIGNATURE | TITLE |

## 3. Manufacturing Facilities – General Contact Information

See LISTING INFORMATION in Section 1 of this document.

## 4. Manual Revisions

Able Sheet Metal will inform QAI immediately of any changes in the operation, manufacturing, and administrative processes. QAI will modify the manual within 30 days if such changes are deemed significant to effect the Quality Control Procedures.

The quality system documentation, including this manual and all attachments, shall be reviewed on an annual basis. Any revisions made to the quality system documentation shall be noted in the RECORD OF REVISIONS section of this manual.

## 5. Product Identification & Labeling

Listed (certified) products are identified with label(s) bearing the following information:

Label 1 (California State Fire Marshal Label):

a) Address, including city and country of manufacture
b) Product Name
c) Date of Manufacture

Figure 1 – Image of Certification Label for California State Fire Marshal

Label 2 (Standard QAI Certification Mark Label):

a) Address, including city and country of manufacture
b) Product Name
c) Production Date Code
d) QAI Listing File Number
e) ASTM E2886/E2886M-20
f) QAI logo shown here:

## 6. Traceability

The manufacturer will ensure that identification and traceability of their product is maintained. The table below states the documentation in use that can be used to trace the product through its various stages of production.

| Manufacturing Process Stage | Description |
|---|---|
| Final Products | Product labeled with the production date. |
| Quality Control Inspection/Testing | Product inspection and test reports are marked with the traceability code, which is the Job number that matches the PO number issued to the customer. |
| Production | Daily production information is kept by recording the PO number from a customer and creating the Job number based off that, all information regarding material used and production is found under the Job Number. |
| Incoming Materials | Incoming materials receiving records are collected and stored on file. |

## 7. Workflow, Manufacturing Process Description

The production process begins with receiving material steel, mesh and intumescent strips.

1. Cut to length, bend and form all the parts.
2. Spot weld the mesh to blades/flanges.
3. Assemble, square and spot weld the frame.
4. Install and spot weld the mesh into the frame.
5. Install the intumescent tape to all the blades/flanges.
6. Insert all the blades into the frame and spot weld the ends

Note: Where the manufacturing process includes combining incoming materials with a specified formulation or assembly specification where the measure of materials is critical, details are covered in Section 12 of this document.

## 8. Product or Production Changes

The following procedure will be followed when making changes to the product or production method:

- Able Sheet Metal will contact QAI to review the proposed changes to the product or production method.
- QAI will evaluate the proposed changes, and perform any testing, engineering analysis, inspection, and quality documentation revisions required. If the changes comply with the listed standard(s), QAI will revise this manual and certification documents accordingly.

- Able Sheet Metal will contact Cal-Fire in writing explaining the changes to be made to the product or production method. Also included will be a revised copy of the quality manual including the changes along with any supporting test data (as required).

- Once confirmation has been received from QAI that the changes area acceptable, the changes to the product or production method may be implemented.

## 9. Organization and Personnel Information

### *9.1. Quality Control Personnel Job Descriptions*

Personnel in charge of Quality Control at Able Sheet Metal San Leandro:
Miguel Baez- Production Manager
Israel Alvarez- Custom Department Supervisor

### *9.2. Qualifications and Training*

Currently all training done for the employees is to shadow a veteran worker for a few weeks and then after a review of understanding, let them work solo to confirm their understanding. The Quality Control members, Miguel and Israel, each developed the specifics on the steps needed to manufacture the vent by matching the patent-pending design.

## 10. Product Packaging, Storage and Shipment

Only products which have passed all necessary QC Tests and visual inspections are shipped with a certification label or mark. Product is held until the manufacturing run has successfully passed all QC tests and is visually checked for damage prior to shipping. After the completed production of the vents, they are stretch-wrapped and then put into one of Able Sheet Metal's cardboard boxes depending on the size.

## 11. Complaints, Corrective Action and Preventative Action

Able Sheet Metal ensures that corrective actions and/or preventative actions are taken to identify and reduce service, product, or process quality problems. This process is part of the continuous improvement program.

Feedback from customers and production personnel is reviewed. Corrective and preventative actions will be based on the nature and urgency of the quality concern. Appropriate and effective corrective and/or preventative action is taken after a root cause analysis is performed.

In the case of defects or damage to the finished goods caused by the manufacturer during the production process, storing, loading or shipping, the manufacturer will take measures to determine cause of defects and to correct such problems. The defect will be traced back via the date/time stamp and identification label on the product.

All quality complaints from customers are recorded on a Quality Complaint Record describing the reason for the complaint as well as the appropriate action taken. This record will be analyzed on an annual basis to provide information for possible improvements.

### *11.1. Recall of Nonconforming Products*

If Able Sheet Metal becomes aware that nonconforming products have been distributed and are in application in the field, a recall of all effected products will be issued. They will notify potentially affected customers, the Certification or Inspection Agency (QAI). All necessary means will be taken to withdraw any risk to public safety. If deemed necessary, the Certification Agency, Inspection Agency (QAI) or ICC-ES will issue notice to the public regarding non-compliant products carrying a certification marking.

## 12. Incoming Materials

### *12.1. Incoming Materials Specifications*

| Material | I.D. (Specification) | Acceptance Category[1,2,3,4] | Approved Supplier(s)[1,2,3,4] |
|---|---|---|---|
| PROMASEAL®LFC intumesces | PROMASEAL®LFC intumesces | 1 | Promat |
| Galvanized Steel Sheets, ASTM A653-20 CS Type A, G90 | 0.0187 x 48 | 3 | Optima Steel International, LLC |
| 16x16 Mesh | 0.018” x 36” x 100’ Stainless Steel 304 Mesh | 3 | McNichols<br>Lawrence Sintered Metals, Inc. |

Acceptance Control of Materials are categorized by one of these 4 classifications:
1. It is deemed that this material is unique, proprietary, and can only be supplied by the manufacturer(s) listed.
2. Other suppliers may be acceptable if evidence is provided that the materials are equivalent to the original materials that were tested, by means of: testing, evaluation, materials certificates, etc. QAI will determine to what degree alternate materials are to be analyzed for acceptance, depending on the type of material and the capacity of the material’s effect within the end product. The procedures outlined in Section 8 of this document must be followed to gain approval of alternate suppliers.
3. Some commodity materials controlled by industry standards may be supplied by any source without prior approval by QAI, provided that the materials certificates are available showing equivalence.
4. It is regarded that the material is very basic or non-critical within the production of the certified product, and may be supplied by any source without the need for supporting rationale in using multiple suppliers.

### *12.2. Incoming Material Acceptance and Testing*

Materials are purchased with the Material Test Reports provided by mills after appropriate testing, and MSDS reports. The material is used for MGV products as well as many of our other products. When the MTR is provided, there’s no need to do in-house testing.

See Appendix A for example data sheets, certificates of analysis, and quality checklist.

### *12.3. Formulation or Assembly Specification*

Appendix A includes the assembly specification drawings for the approved products.

# 13. Final Product Inspection and Quality Control Tests

### *13.1. In-house Quality Control Tests*

The final inspection of completed vent production is done with Starrett high-accuracy squares that are non-adjustable.

| Material | Property measured | Test Method | Frequency of testing | Acceptance limits (mean results) |
|---|---|---|---|---|
| Finished Vent | Dimensions | Ruler | Every Vent | Drawing spec ± 1/16” |

### *13.2. Finished Product Specifications*

See the appendix for vents specifications.

# 14. Nonconforming Material

Nonconforming materials are described as products or materials that have failed an inspection or quality control test. All materials used or products made between the last passing and the failing inspections or tests must be segregated and inspected for compliance, and either re-worked so they are in compliance, disposed of, or downgraded for use in non-certified products. All finished products must pass the QC requirements to bear the certification label or mark.

Nonconforming materials are segregated and put into a scrap pile.

# 15. Measuring and Test Equipment, Calibrations

Calibration records and schedules shall be maintained by a qualified Quality Control representative and kept at the manufacturing facility. All calibrations must be performed by vendors accredited to ISO/IEC 17025 or otherwise acceptable to the Inspection Agency (QAI), or by internally documented procedures that are approved by the Inspection Agency and are traceable to National Measurement standards such as NIST in the United States, or an equivalent International standard. The only used during production is a Starrett high-accuracy square (non-adjustable). This tool is inspected every two weeks by the QC and safety inspectors to ensure usability.

| Type of Equipment | Function | Equipment No. | Calibration | | |
|---|---|---|---|---|---|
| | | | Frequency | External Provider | Internal Procedure |
| Micrometer | Thickness | N/A | | Yes | |
| Measuring Tape | Dimensions | | | Yes | |

## 16. QC Forms, Document Approval, Records

16.1.1. Example reports and records are included in appendix A.

16.1.2. Able Sheet Metal has an internal approval process in place to ensure that the information is complete, accurate, and free of conflicting information. All records are reviewed and signed off by the appropriate QC personnel.

16.1.3. All records relating to production including forms, worksheets, logs, specifications, and reports will be kept for a minimum of two years. New or proposed revisions to forms, worksheets, specifications, etc. are established by Able Sheet Metal and are sent to QAI for review and insertion in the quality manual where applicable.

## 17. Manufacturing Declarations

Able Sheet Metal agrees to comply with all the requirements stated in this manual.

17.1.1. The Cal Fire name and logo and report number will only be used on products that are in compliance with the published evaluation report and the approved quality control documentation.

17.1.2. Able Sheet Metal will promptly investigate and respond to Cal Fire when apprised by Cal Fire of complaints concerning product performance.

17.1.3. Able Sheet Metal agrees to permit Cal Fire and QAI representatives to examine, at distribution points and the manufacturing plant, any product labeled as being in conformance with the evaluation report.

17.1.4. Able Sheet Metal agrees to notify Cal Fire and QAI in writing if there is a significant change in the product, manufacturing procedures or quality system documentation from what was recognized upon issuance of the evaluation report. A significant change is one that may reduce the performance of the product as it pertains to applicable test standards or acceptance criteria.

# APPENDIX A

## MGV Soffit Specs

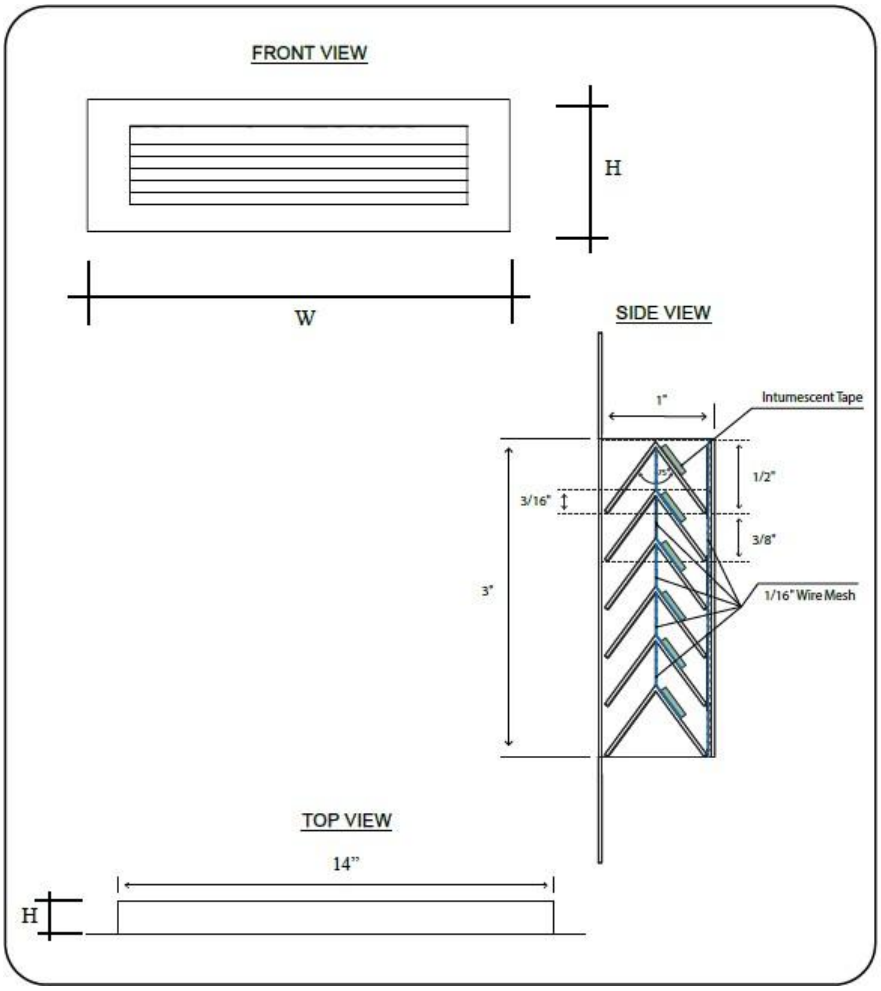


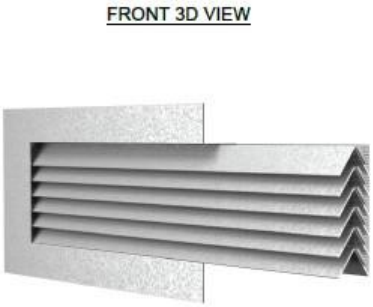


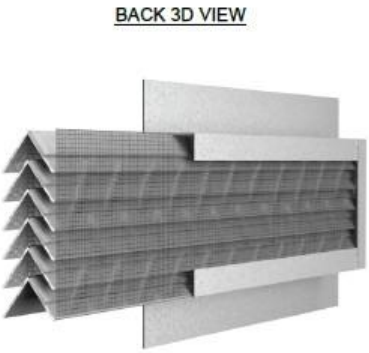

# MGV, Fire Res Multi Guard Vent

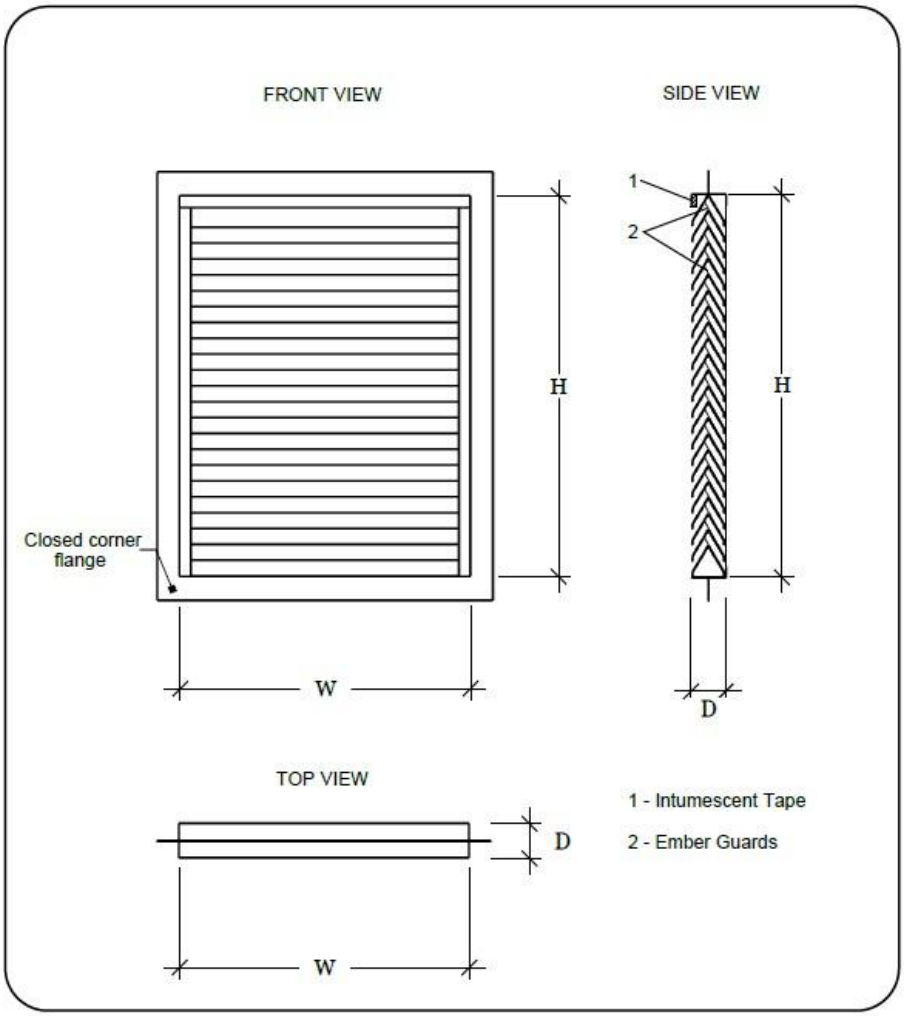


FRONT 3D VIEW

BACK 3D VIEW

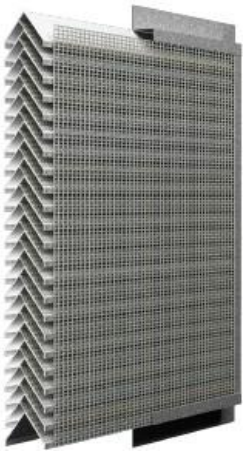

## MGV, Spec, Drawing Outlining internal secondary mesh screen.

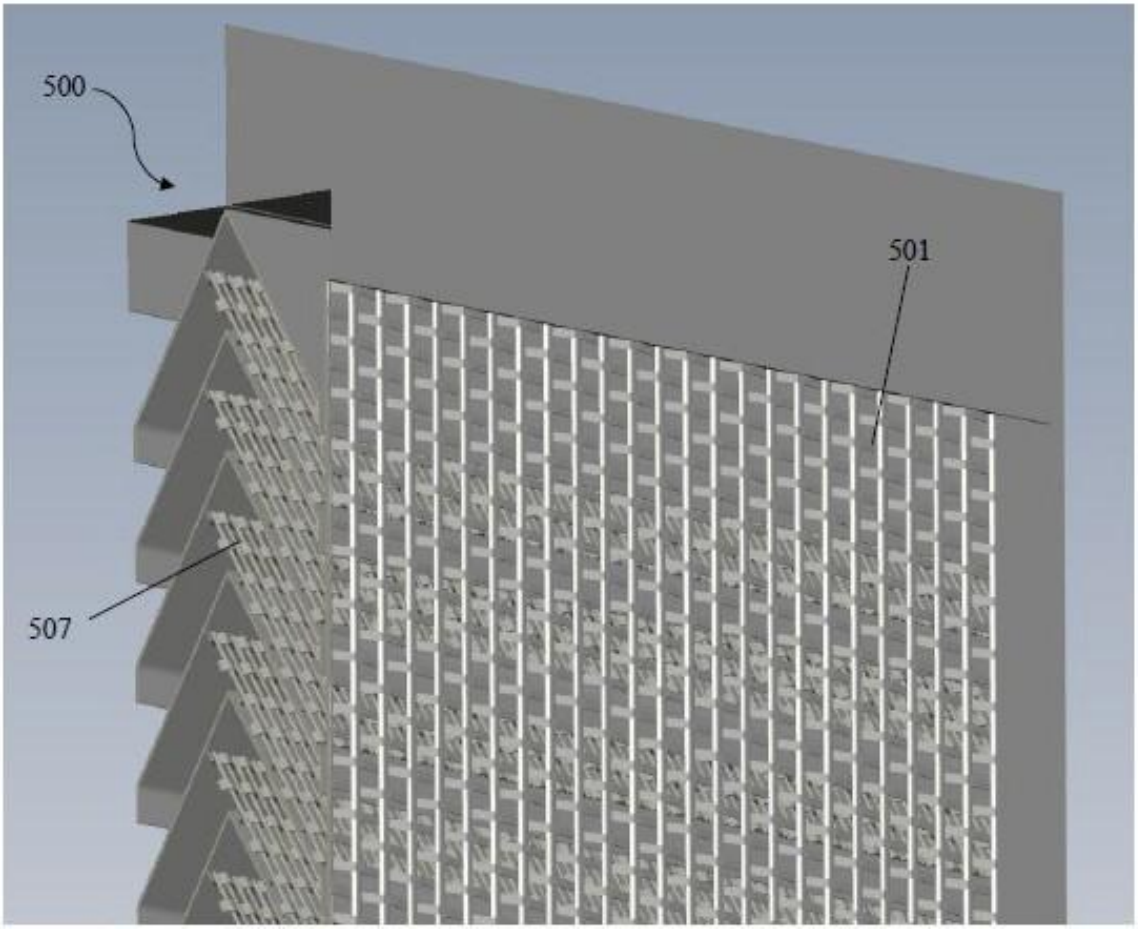

## Appendix B-Material Cert Examples and Data Sheets

### 1. Promat Intumescent Strip Data Sheet

Promat®

Technical data sheet

Fire rated assemblies & appliances
Intumescent seals

# PROMASEAL®-LFC

**Product description**
PROMASEAL®-LFC is a graphite-based fire protection seal that intumesces above approx. 190 °C.

**Properties**
- Resistant to atmospheric effects (light, heat, frost, UV radiation, humidity [1])
- Free from organic solvents

| Technical data | | | |
|---|---|---|---|
| Colour | | Anthracite grey | |
| Reaction to fire | Class | E | |
| Use category [1] | Class | X | |
| Ageing [2] | Years | 33 | |
| Expansion temperature | °C | approx. 190 | |
| Thickness (tolerance) | mm | 1.0 (±0.3) | 1.8 (±0.3) |
| Weight (tolerance) | kg/m² | 1.1 (±0.4) | 1.9 (±0.4) |
| Expansion factor (tolerance) | Loaded | 1:12 - 1:22 (1:5 - 1:25) | 1:12 - 1:22 (1:5 - 1:25) |
| Expansion pressure (tolerance) | N/mm² | 0.35 - 0.9 (>0.3) | 0.35 - 0.9 (>0.3) |

(1) The fire protection properties according to TR 024: 2009 are not impaired by weathering, however direct influence from humidity can lead to optical and fastening impairments. We therefore recommend that you do not expose the product to permanent direct moisture. (2) Accelerated ageing test with subsequent fire test according to EN 1363-1.

| Delivery forms | | | |
|---|---|---|---|
| **ROLLS** | | **-LFCSK** | |
| Thickness (self-adhesive or decorative) | mm | 1.20 | 2.00 |
| Width (tolerance) x Length | mm<br>mm | 9–14 (+0.1/-0.5) x 50 m roll<br>≥15 (+0.1/-0.5) x 100 m roll | |
| Packaging | | Single or cardboard box | |
| **SPECIAL TYPE** | | **-LFCESK** (polyethylene foam) | |
| Delivery form | | Rolls | |
| Temperature resistance foam | °C | -30 to +80 | |
| Width (tolerance) | mm | 10-40 (+0.1/-0.5) | |
| Density foam | kg/m³ | approx. 30 | |

**Type abbreviations**

| | |
|---|---|
| LFC | Basic version of fire protection laminate |
| LFCSK | Fire protection seal with self-adhesive<br>*Total thickness: LFC + self-adhesive 0.2 mm* |
| LFCESK | Fire protection seal, PE foam and self-adhesive<br>*Total thickness: LFC + PE foam 3 mm* |

**Stainless Steel Mesh Material Cert Example**

# Lawrence Sintered Metals, Inc.

178 S. 6th Ave. City of Industry, CA 91746
Tel: (626)333-6830 Fax: (626)333-6829

## Material Certificate

Date: February 11, 2025
To: Able Metal

PO No:
Invoice No:
Material: Stainless Steel
Type: 304
Heat Number: E1105653

Mesh: 16x16
Wire Diameter: .018”
Width/Length: 36”x100’
Quantity: 1500 SF

Chemical Analysis: (%)

C: 0.055
Si: 0.46
Mn: 1.13
P: 0.026
S: 0.008
Ni: 8.12
Cr: 18.21

We hereby certify that all materials used in the manufacturing of parts called for on the order listed above complies with all the applicable order specifications.

Sincerely,
Lawrence Sintered Metals, Inc.

## Galvanized Sheet Steel Mill Certificate Example

UPI
A United States Steel Company

P.O. Box 471
900 Loveridge Road
Pittsburg, CA 94565

### *Metallurgical Test Report and Certification*

P.O. NUMBER 42941-AUG MILL ORDER NUMBER NS4059301 TALLY TF329019
VEHICLE ID BLUE RIBBON EXPRESS SHIP DATE 08-16-2022

SOLD TO: 0241980 064
OPTIMA STEEL INTERNATIONAL,LLC
BOYNTON TOWN CENTER
950 N. CONGRESS AVENUE # J220
BOYNTON BEACH, FL 33426-0000

SHIP TO:
OPTIMA STEEL INTERNATIONAL,LLC
C/O CONTINUOUS COATING CORP.
520 WEST GROVE AVE
ORANGE, CA 92865-0000

PREPARED BY THE OFFICE OF:
RONNIE PIERCE
MANAGER QA

ON:
DATE 10-18-2022
TIME 15:07:46

PREPARED BY MANAGER OF QA
Ronnie Pierce
UPI

SPEC: GALVANIZED SHEETS, ASTM A653-20 CS TYPE A, MIN SPANGLE, G90, NO CHEMICAL TREATMENT, ROHS COMPLIANT, LIGHT OIL, 1/2 STD MIN GAUGE TOLERANCE, 1/3 STANDARD FLATNESS TOLERANC, THICKNESS TOLERANCE IS BASED ON ASTM SUPPLEMENTARY REQUIREMENTS

CERT: THIS IS TO CERTIFY AND GUARANTEE THAT THE MATERIAL DESCRIBED HEREIN WAS MANUFACTURED, SAMPLED, TESTED, AND/OR INSPECTED BY UPI AND MEETS THE REQUIREMENTS OF THE STATED SPECIFICATION.

NOTE: THE MATERIAL DESCRIBED HEREIN WAS MELTED AND MANUFACTURED EXCLUSIVELY IN THE UNITED STATES.

MATERIAL DESCRIPTION: .0187 MIN X 48.0000

==========

MELTED, POURED AND MANUFACTURED IN THE UNITED STATES.

HEAT# 117861 SOURCE HEAT# 22078462-2022 EAF
C=.030, MN=.23, P=.008, S=.002, SI=.030, CU=.09, NI=.04, CR=.03, MO=.017, AL=.021, N=.008, V=.001, NB=.001, TI=.000, B=.006

| HEAT NUMBER | TICKET ID | TEST PIECE IDENT | HRB | WGT |
|---|---|---|---|---|
| 117861 | GVHA72 | | | 11960 |
| | GVHA73 | | | 11940 |
| | GVHA74 | | | 11960 |
| | LCXB03 | | | 11650 |

==========

METALLURGICAL TEST HAS NOT BEEN REQUESTED FOR THIS ORDER ITEM

## Quality Control Checklist - MGV Products

Inspected by: _____ Inspection Date: _____

| Product Type | Feature Examination | Classification | | Notes |
|---|---|---|---|---|
| | | Pass | Fail | |
| Promaseal Tape (LFCSK-2.0) | Product SKU Match | | | Product code(s) on the invoice are consistent with the physical goods. |
| | Quantity Received Match | | | Quantity on invoice is consistent with the physical goods received. |
| | Technical Data Match | | | Technical data is consistent with the physical goods received. |
| | Safety Data Match | | | Safety data is consistent with the physical goods received. |
| MGV Product #1 (write below) | Appearance | | | Product appearance shows no bad spots, metal is not bent badly, etc. |
| | Material Integrity | | | Product materials are durable quality (no rust, parts are secure, etc.). |
| | Intumescent Placement | | | Intumescent is placed where specified depending on the MGV type. |
| MGV Product #2 (write below) | Appearance | | | Product appearance shows no bad spots, metal is not bent badly, etc. |
| | Material Integrity | | | Product materials are durable quality (no rust, parts are secure, etc.). |
| | Intumescent Placement | | | Intumescent is placed where specified depending on the MGV type. |
| MGV Product #3 (write below) | Appearance | | | Product appearance shows no bad spots, metal is not bent badly, etc. |
| | Material Integrity | | | Product materials are durable quality (no rust, parts are secure, etc.). |
| | Intumescent Placement | | | Intumescent is placed where specified depending on the MGV type. |
| MGV Product #4 (write below) | Appearance | | | Product appearance shows no bad spots, metal is not bent badly, etc. |
| | Material Integrity | | | Product materials are durable quality (no rust, parts are secure, etc.). |
| | Intumescent Placement | | | Intumescent is placed where specified depending on the MGV type. |
| MGV Product #5 (write below) | Appearance | | | Product appearance shows no bad spots, metal is not bent badly, etc. |
| | Material Integrity | | | Product materials are durable quality (no rust, parts are secure, etc.). |
| | Intumescent Placement | | | Intumescent is placed where specified depending on the MGV type. |
| MGV Product #6 (write below) | Appearance | | | Product appearance shows no bad spots, metal is not bent badly, etc. |
| | Material Integrity | | | Product materials are durable quality (no rust, parts are secure, etc.). |
| | Intumescent Placement | | | Intumescent is placed where specified depending on the MGV type. |
| MGV Product #7 (write below) | Appearance | | | Product appearance shows no bad spots, metal is not bent badly, etc. |
| | Material Integrity | | | Product materials are durable quality (no rust, parts are secure, etc.). |
| | Intumescent Placement | | | Intumescent is placed where specified depending on the MGV type. |
| MGV Product #8 (write below) | Appearance | | | Product appearance shows no bad spots, metal is not bent badly, etc. |
| | Material Integrity | | | Product materials are durable quality (no rust, parts are secure, etc.). |
| | Intumescent Placement | | | Intumescent is placed where specified depending on the MGV type. |
| MGV Product #9 (write below) | Appearance | | | Product appearance shows no bad spots, metal is not bent badly, etc. |
| | Material Integrity | | | Product materials are durable quality (no rust, parts are secure, etc.). |
| | Intumescent Placement | | | Intumescent is placed where specified depending on the MGV type. |
| MGV Product #10 (write below) | Appearance | | | Product appearance shows no bad spots, metal is not bent badly, etc. |
| | Material Integrity | | | Product materials are durable quality (no rust, parts are secure, etc.). |
| | Intumescent Placement | | | Intumescent is placed where specified depending on the MGV type. |
| MGV Product #11 (write below) | Appearance | | | Product appearance shows no bad spots, metal is not bent badly, etc. |
| | Material Integrity | | | Product materials are durable quality (no rust, parts are secure, etc.). |
| | Intumescent Placement | | | Intumescent is placed where specified depending on the MGV type. |
| MGV Product #12 (write below) | Appearance | | | Product appearance shows no bad spots, metal is not bent badly, etc. |
| | Material Integrity | | | Product materials are durable quality (no rust, parts are secure, etc.). |
| | Intumescent Placement | | | Intumescent is placed where specified depending on the MGV type. |
| MGV Product #13 (write below) | Appearance | | | Product appearance shows no bad spots, metal is not bent badly, etc. |
| | Material Integrity | | | Product materials are durable quality (no rust, parts are secure, etc.). |
| | Intumescent Placement | | | Intumescent is placed where specified depending on the MGV type. |
| MGV Product #14 (write below) | Appearance | | | Product appearance shows no bad spots, metal is not bent badly, etc. |
| | Material Integrity | | | Product materials are durable quality (no rust, parts are secure, etc.). |
| | Intumescent Placement | | | Intumescent is placed where specified depending on the MGV type. |
| MGV Product #15 (write below) | Appearance | | | Product appearance shows no bad spots, metal is not bent badly, etc. |
| | Material Integrity | | | Product materials are durable quality (no rust, parts are secure, etc.). |
| | Intumescent Placement | | | Intumescent is placed where specified depending on the MGV type. |
| MGV Product #16 (write below) | Appearance | | | Product appearance shows no bad spots, metal is not bent badly, etc. |
| | Material Integrity | | | Product materials are durable quality (no rust, parts are secure, etc.). |
| | Intumescent Placement | | | Intumescent is placed where specified depending on the MGV type. |
| MGV Product #17 (write below) | Appearance | | | Product appearance shows no bad spots, metal is not bent badly, etc. |
| | Material Integrity | | | Product materials are durable quality (no rust, parts are secure, etc.). |
| | Intumescent Placement | | | Intumescent is placed where specified depending on the MGV type. |

## RECORD OF REVISIONS

| REVISION | | | APPROVALS | | | |
|---|---|---|---|---|---|---|
| **DATE** | **PAGES REVISED** | **DESCRIPTION** | **Able Sheet Metals** | **DATE** | **QAI** | **DATE** |
| | | | | | | |
| | | | | | | |
| | | | | | | |
| | | | | | | |
| | | | | | | |