# EVALUATION REPORT

Applicant File Number: B1173
Report Number: B1173-1

Applicant: Able Sheet Metal
614 N Ford Blvd.
Los Angeles, CA 90022
Contact: Michael Tovmasyan, Special Projects Manager
Email: michael@ablemetal.com
Phone: (323) 236-2181

Edition 1: September 2, 2026; Application Number B1173-1 – Burnaby British Colombia Office
Issued by: Jackie Zhou, Project Specialist,
Reviewed by: Jason Friedrich, P.E., Engineering Manager.
Contents: Pages 1 through 11,

## APPLICABLE REQUIREMENTS:

**ASTM E2886/E2886M-20** *Standard Test Method for Evaluating the Ability of Exterior Vents to Resist the Entry of Embers and Direct Flame Impingement*

**ASTM E2912-17** *Fire Test of Non-Mechanical Fire Dampers Used in Vented Construction*

## SUBJECT:

MGV (Multi-Guard Vent) Gable Louver Vent and MGV Eave/Foundation/Soffit Vents

| Manufacturing and Labeling Location: | | | |
|---|---|---|---|
| **1)** | Able Sheet Metal<br>4532 Floral Drive.,<br>Los Angeles, CA, 90022<br>Contact Person: Gurgen Tovmasyan<br>Phone: 1-800-699-2253<br>Email: ablemetal@yahoo.com | **2)** | Able Sheet Metal<br>14111 Catalina St.,<br>San Leandro, CA 94577<br>Contact Person: Jess Grandy<br>Phone: 1-480-640-0458<br>Email: jess@ablemetal.com |



ALL REPORTS ARE THE CONFIDENTIAL PROPERTY OF CLIENTS. PUBLICATION OF STATEMENTS, CONCLUSIONS OR EXTRACTS FROM OR REGARDING OUR REPORTS IS NOT PERMITTED WITHOUT OUR WRITTEN APPROVAL. ANY LIABILITY ATTACHED THERETO IS LIMITED TO THE FEE CHARGED. THE RESULTS OF THIS EVALUATION REPORT PERTAIN ONLY TO THE SPECIFIC SAMPLE(S) EVALUATED.

**MODELS:**

| Model Number | Flange, Size, inches | Body Size (width x length), inches | Model Number | Flange, Size, inches | Body Size (width x length), inches |
|---|---|---|---|---|---|
| **Soffit Vents** | | | | | |
| 4500-MGV16 | 1 | 3 x 14 | 4780-MGV16 | 1 | 6 x 14 |
| 4620-MGV16 | 1 | 3 x 22 | 4740-MGV16 | 1 | 6 x 22 |
| 4960-MGV16 | 1 | 3 x 60 | 4980-MGV16 | 1 | 6 x 60 |
| 4963-MGV16 | 1 | 3 x 60 for balcony inspections | 4870-MGV16 | 1 | 6 x 72 |
| 4860-MGV16 | 1 | 3 x 72 | 4875-MGV16 | 1 | 6 x 120 |
| 4965-MGV16 | 1 | 3 x 120 | 4440-MGV16 | 1 | 12 x 12 |
| 4970-MGV16 | 1 | 4 x 60 | | | |
| 4865-MGV16 | 1 | 4 x 72 | | | |
| 4890-MGV16 | 1 | 4 x 120 | | | |
| **Louver Vents** | | | | | |
| 5420-1206-MGV16 | 1 | 12 x 6 | 5420-1208-MGV16 | 1 | 12 x 8 |
| 5420-1212-MGV16 | 1 | 12 x 12 | 5420-1224-MGV16 | 1 | 12 x 24 |
| 5320-MGV16 | 1 | 14 x 12 | 5420-1414-MGV16 | 1 | 14 x 14 |
| 5420-1416-MGV16 | 1 | 14 x 16 | 5340-MGV16 | 1 | 14 x 18 |
| 5360-MGV16 | 1 | 14 x 24 | 5420-1616-MGV16 | 1 | 16 x 16 |
| 5420-1624-MGV16 | 1 | 16 x 24 | 5405-1818-MGV16 | 1 | 18 x 18 |
| 5410-MGV16 | 1 | 18 x 24 | | | |

**CONDITIONS OF ACCEPTANCE:**

1. Products must successfully pass all factory QC tests prior to labeling with the QAI logo.
2. Installation instructions are provided with products covered under this evaluation report.
3. Final acceptance of the product in the intended application is to be determined by the authority having jurisdiction.



ALL REPORTS ARE THE CONFIDENTIAL PROPERTY OF CLIENTS. PUBLICATION OF STATEMENTS, CONCLUSIONS OR EXTRACTS FROM OR REGARDING OUR REPORTS IS NOT PERMITTED WITHOUT OUR WRITTEN APPROVAL. ANY LIABILITY ATTACHED THERETO IS LIMITED TO THE FEE CHARGED. THE RESULTS OF THIS EVALUATION REPORT PERTAIN ONLY TO THE SPECIFIC SAMPLE(S) EVALUATED.

## Marking Methods

Products are marked in a permanent manner, where the marking is readily visible after installation, with the following:

a) Address, including city and country of manufacture
b) Product Name
c) Production Date Code
d) QAI Listing File Number B1173
e) ASTM E2886/E2886M-20
f) QAI logo shown here:

Or for California State Fire Marshal (CSFM)

a) Address, including city and country of manufacture
b) Product Name
c) Date of Manufacture
d) CSFM label shown here

ALL REPORTS ARE THE CONFIDENTIAL PROPERTY OF CLIENTS. PUBLICATION OF STATEMENTS, CONCLUSIONS OR EXTRACTS FROM OR REGARDING OUR REPORTS IS NOT PERMITTED WITHOUT OUR WRITTEN APPROVAL. ANY LIABILITY ATTACHED THERETO IS LIMITED TO THE FEE CHARGED. THE RESULTS OF THIS EVALUATION REPORT PERTAIN ONLY TO THE SPECIFIC SAMPLE(S) EVALUATED.

**FACTORY TESTS:**

Refer to Sections 12, and 13 of the Able Sheet Metals Factory Inspection Procedure (FIP) Manual for the required Quality Control checks that are to be performed during the manufacturing process of the soffit and louver products.

**Warning**

The factory tests specified may present a risk of injury to personnel and/or property and should only be performed by persons knowledgeable of such hazards and under conditions designed to minimize the possibility of injury.

**TESTS:**
The following table outlines testing conducted on Able Sheet Metal products. Testing was conducted on products verified by QAI to be normally manufactured products, representative of end use.

| TEST REPORT NO. | DESCRIPTION | DATE | ISSUED BY | TEST STANDARD | RESULTS |
|---|---|---|---|---|---|
| RJ8990-R2 | 4500-MGV16 SOFFIT VENT, 3" X 14" | JUNE 27, 2024 | QAI LABORATORIES | ASTM E2886/E2886M-14; ASTM E2912-17 | PASS – HORIZONTAL ORIENTATION |
| RJ9789F-1 | 12" X 12" MGV STYLE SOFFIT VENT | MARCH 04, 2025 | QAI LABORATORIES | ASTM E2886/E2886M-14 | PASS |
| RJ9789F-2 | 4440-MGV16 / 12" X 12" MGV STYLE SOFFIT VENT | MARCH 04, 2025 | QAI LABORATORIES | ASTM E2912-17 | PASS – HORIZONTAL ORIENTATION |
| QA-2154F-2 | 20" W X 20" L MGV LOUVER VENTS | JULY 30, 2025 | QAI LABORATORIES | ASTM E2912-17 | PASS – VERTICAL ORIENTATION |
| QA-2154F-3 | 20" W X 13" L MGV LOUVER VENTS | JULY 31, 2025 | QAI LABORATORIES | ASTM E2886/E2886M-14 | PASS |
| QA-951-R1 | MGV STYLE SOFFIT VENT, 12" X 13" | OCTOBER 31, 2025 | QAI LABORATORIES | ASTM E2912-17 | PASS – VERTICAL ORIENTATION |
| QA-3026F-1 | 20" W X 20" L MGV LOUVER VENTS | SEPTEMBER 03, 2025 | QAI LABORATORIES | ASTM E2912-17 | PASS – HORIZONTAL ORIENTATION |



ALL REPORTS ARE THE CONFIDENTIAL PROPERTY OF CLIENTS. PUBLICATION OF STATEMENTS, CONCLUSIONS OR EXTRACTS FROM OR REGARDING OUR REPORTS IS NOT PERMITTED WITHOUT OUR WRITTEN APPROVAL. ANY LIABILITY ATTACHED THERETO IS LIMITED TO THE FEE CHARGED. THE RESULTS OF THIS EVALUATION REPORT PERTAIN ONLY TO THE SPECIFIC SAMPLE(S) EVALUATED.

**Engineering Evaluations:**
The following table outlines engineering evaluations conducted on Able Sheet Metal products.

| REPORT NO. | DESCRIPTION | DATE | ISSUED BY | STANDARD / BASIS | RESULTS / COVERAGE |
|---|---|---|---|---|---|
| RJ9454-EEV-1-R1 | Engineering evaluation for MGV style soffit vent product line | JUNE 27, 2024 | QAI | ASTM E2912-17; ASTM E2886/E2886M-14 | Covers larger 3" core MGV style soffit vent sizes for horizontal installation based on tested 4500-mgv16, 3" x 14" vent. covers 4500-mgv16, 4620-mgv16, 4960-mgv16, and 4965-mgv16. |
| RJ9789-EEV-1-R1 | Engineering evaluation for MGV style soffit vent product line with wider core sizes | JULY 15, 2025 | QAI | ASTM E2912-17; ASTM E2886/E2886M-14 | Covers MGV style soffit vent product line for horizontal and vertical installation based on tested 4500-mgv16, 3" x 14", and 4440-mgv16, 12" x 12", vents. covers 3", 6", and 12" body height/core sizes listed in the evaluation, including longer untested sizes up to 120". |
| QA-2154-EEV | Engineering evaluation for MGV style soffit vent product line with wider core sizes | OCTOBER 7, 2025 | QAI | ASTM E2912-17; ASTM E2886/E2886M-14 | Covers the remaining MGV style louver vents for horizontal and vertical installation based on tested 20” x 20” and 20” x 13” Louver Vents covers the remaining Louver models listed in the evaluation. |

**CONCLUSION:**

The products outlined in the Description section of this Evaluation Report were found to comply with the requirements of the applicable standards and are acceptable for listing with QAI.

Issued By :

**Jackie Zhou**
Project Specialist

Reviewed By :

**Jason Friedrich, P.E.**
Engineering Manager



ALL REPORTS ARE THE CONFIDENTIAL PROPERTY OF CLIENTS. PUBLICATION OF STATEMENTS, CONCLUSIONS OR EXTRACTS FROM OR REGARDING OUR REPORTS IS NOT PERMITTED WITHOUT OUR WRITTEN APPROVAL. ANY LIABILITY ATTACHED THERETO IS LIMITED TO THE FEE CHARGED. THE RESULTS OF THIS EVALUATION REPORT PERTAIN ONLY TO THE SPECIFIC SAMPLE(S) EVALUATED.

# APPENDIX A

## MGV Soffit Specs

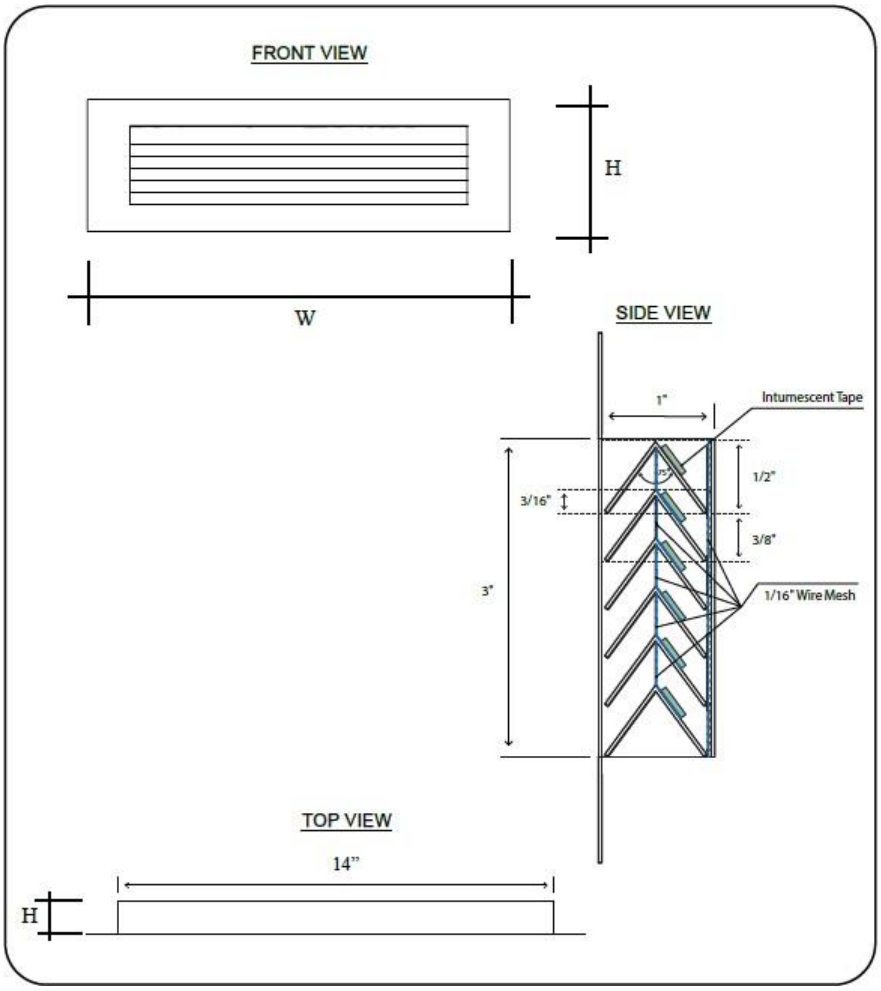


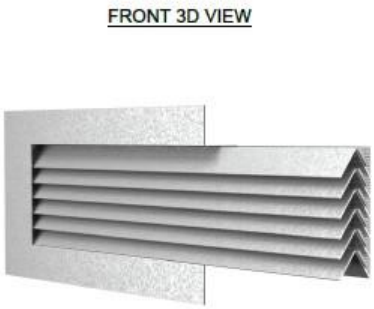


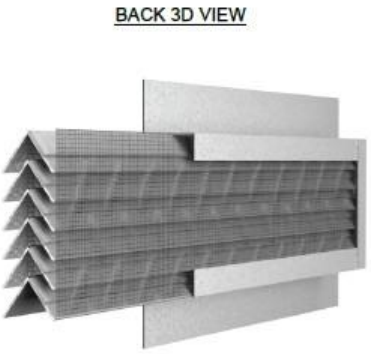




ALL REPORTS ARE THE CONFIDENTIAL PROPERTY OF CLIENTS. PUBLICATION OF STATEMENTS, CONCLUSIONS OR EXTRACTS FROM OR REGARDING OUR REPORTS IS NOT PERMITTED WITHOUT OUR WRITTEN APPROVAL. ANY LIABILITY ATTACHED THERETO IS LIMITED TO THE FEE CHARGED. THE RESULTS OF THIS EVALUATION REPORT PERTAIN ONLY TO THE SPECIFIC SAMPLE(S) EVALUATED.

# MGV, Fire Res Multi Guard Vent

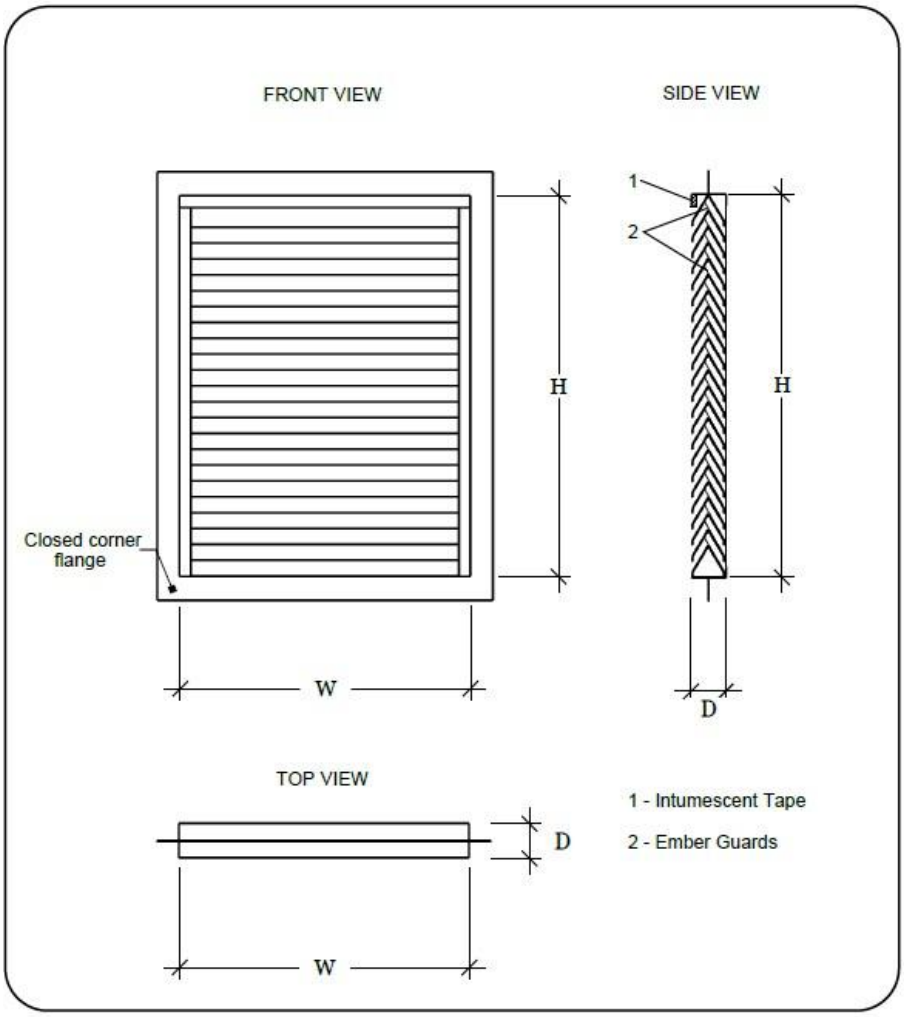


FRONT 3D VIEW

BACK 3D VIEW

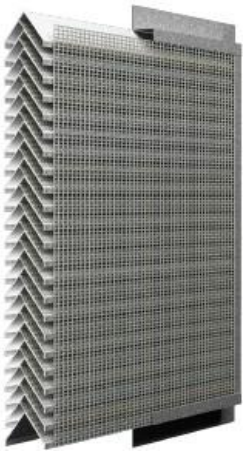



ALL REPORTS ARE THE CONFIDENTIAL PROPERTY OF CLIENTS. PUBLICATION OF STATEMENTS, CONCLUSIONS OR EXTRACTS FROM OR REGARDING OUR REPORTS IS NOT PERMITTED WITHOUT OUR WRITTEN APPROVAL. ANY LIABILITY ATTACHED THERETO IS LIMITED TO THE FEE CHARGED. THE RESULTS OF THIS EVALUATION REPORT PERTAIN ONLY TO THE SPECIFIC SAMPLE(S) EVALUATED.

**MGV, Spec, Drawing Outlining internal secondary mesh screen.**

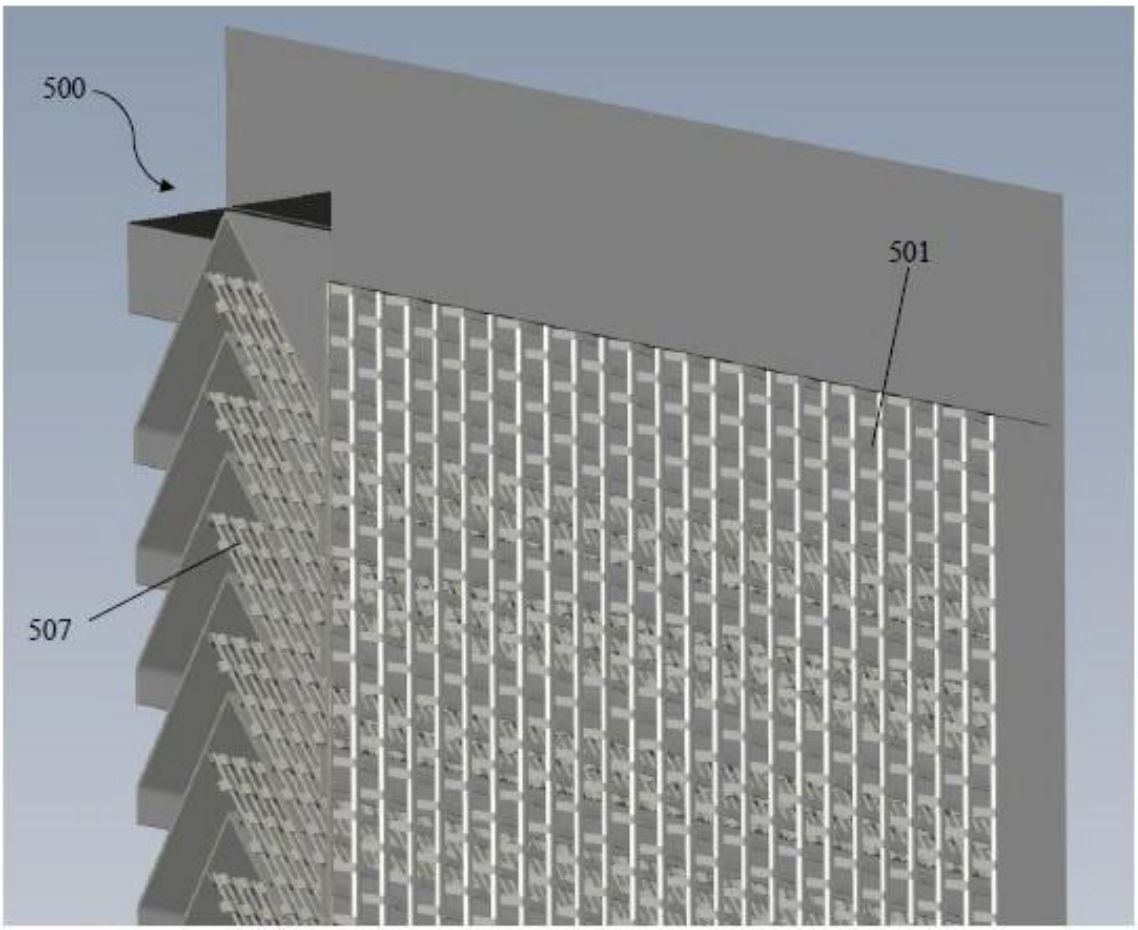




ALL REPORTS ARE THE CONFIDENTIAL PROPERTY OF CLIENTS. PUBLICATION OF STATEMENTS, CONCLUSIONS OR EXTRACTS FROM OR REGARDING OUR REPORTS IS NOT PERMITTED WITHOUT OUR WRITTEN APPROVAL. ANY LIABILITY ATTACHED THERETO IS LIMITED TO THE FEE CHARGED. THE RESULTS OF THIS EVALUATION REPORT PERTAIN ONLY TO THE SPECIFIC SAMPLE(S) EVALUATED.

## REPORT REVISION HISTORY:

| Date | Section | Version | Change Description | Initials |
|---|---|---|---|---|
| September 2, 2026 | All | Edition 1 | Original Report. | JZ |



ALL REPORTS ARE THE CONFIDENTIAL PROPERTY OF CLIENTS. PUBLICATION OF STATEMENTS, CONCLUSIONS OR EXTRACTS FROM OR REGARDING OUR REPORTS IS NOT PERMITTED WITHOUT OUR WRITTEN APPROVAL. ANY LIABILITY ATTACHED THERETO IS LIMITED TO THE FEE CHARGED. THE RESULTS OF THIS EVALUATION REPORT PERTAIN ONLY TO THE SPECIFIC SAMPLE(S) EVALUATED.